GreenKode Consulting Engineers s.a.r.l.

BEIT EL BARAKA

DESIGN SUPPLY AND INSTALLATION OF SOLAR PV SYSTEM FOR SCHOOLS IN LEBANON

TENDER DOCUMENTS

MAY 2022

BEIT EL BARAKA

INVITATION FOR BID

For: DESIGN, SUPPLY AND INSTALLATION OF SOLAR PV SYSTEM FOR SCHOOLS IN LEBANON

Beit el Baraka is a Beirut-based NGO supporting 226,000 Lebanese households across the country living in financial distress.

Beit el Baraka mission is to ensure dignity to Lebanese citizens and assist them in their struggle against falling into extreme poverty. In a spirit of respect and support, we give them access to healthy food, decent livelihood, healthcare, and education.

Beit el Baraka is registered in Lebanon (where it operates) under decree number 2277. It is also registered in the US (holding 501(c)3 status) and in Australia (ABN: 54648808048).

Beit el Barak team is working on multiple projects and sectors. FORSA is the Project subject to this tender

The steep deterioration in living conditions is leading to increased student drop-outs, especially among marginalized households. Schools have threatened to shut because of extortionate operating costs amid rampant inflation. And teaching staff exodus has become a serious issue as wages have become unsustainably low.

The project aims to ensure that private education more sustainable in Lebanon and schools must become more resilient. By funding their Capex for purchase & installation of renewable & independent energy sources

The saved Opex on energy costs is used to offset next 3 years of unpaid tuition fees for BeB-identified students

This project will contribute to preventing the collapse of the education system, which would have devastating repercussions on the private sector by affecting in total:

- 700,000 students
- 59,000 teachers
- 15,000 school administrators

Bet El Baraka is inviting contractors to submit a Bid for performing the design, supply and installation of Solar PV systems in Schools in Lebanon as described in the below summary table and detailed in the attached Section 3,

You may obtain further information in response to written requests to procurement@beitelbaraka.org

Beit El Baraka has the right to reduce/increase quantities of sites within a reasonable limit without changes to the units prices offered. Nonetheless bidders cannot choose schools or units costs and disregard others

GreenKode Consulting Engineers s.a.r.l.

Discounts offered on a combination of multiple lots will be considered.

All bids must be delivered to the above mentioned address at, or before 17 June 2022, at 12:00 noon.

Please confirm your intent to submit a response to this tender

Yours Faithfully,

Contract Conditions

Any Contract placed as a result of this IFB will be subject to Conditions of Contract for the Procurement of Works and the Special Conditions of Contract provided in Section 2 of the IFB ("Conditions of Contract").

Technical Requirements

The Works shall conform to the Technical Requirements given in Section 3. Any non-compliance with the described Works should be stated in the bidder's technical proposal required at Section 4. Forms. The performance and time for completion of the Works will be a key factor in evaluating the Bid. It is therefore vital that the optimum and most accurate performance and completion times are provided. All Bidders shall provide with their Bid a preliminary description of the proposed work method including, statement of compliance of technical speciation, drawings and charts, and a work schedule as required in Section 4. Forms.

Contents of Bid

Please complete the Form of Bid and other Forms which are contained in Section 4 of the IFB. The Bid shall cover all costs of labour, materials, equipment, overheads, profits and all associated costs for performing the Works. **Bidders should take careful note of Bid Pricing in the Section 1 of Instructions to bidders.**

The Bill of Quantities given in Form 4.2 detailing the price of performing the Works shall be completed in full as part of the Bid. The cost of any incidental works shall be deemed to be included in the price of the Bid.

The ability of bidders to consistently perform to the required quality will be an important factor in the evaluation. It is therefore essential that sufficient company information to demonstrate the bidder's capability to perform the Contract is submitted with the bid. Such information should include, but not be limited to, details of the bidder's track record. Failure to provide such information may result in your bid not being considered.

Validity of Bid

The Bid must be valid for acceptance for a period of 90 days from the "Bid-Closing Date" date shown above.

Bid Completion and Submission: Bids must comply with the following conditions:

The bid as well as all correspondence and documents relating to the bid, between the bidder and Beit El Baraka, shall be in the English language. Supporting documents and printed literature provided by the bidder may be in another language.

The proposal shall be typed or written in indelible ink and shall be signed by the bidder or a person or persons duly authorized to bind the bidder to the contract.

A bid shall contain no interlineations, erasures, or overwriting except, as necessary to correct errors made by the bidder, in which case such corrections shall be initialed by the person or persons signing the proposal.

All bids including appendices and all supporting documents must be submitted by hard copy as structed below.

NO.	Form No.	Required Documents	Instruction
1	Form 4.0	Bidder Information Form	Bidders are requested to submit these documents **just once** regardless of the No. of the lots the bidders offer
2	-	Copy of registrations	
3	-	Power of Attorney	
4	-	- Audit report for the past 3 years	
5	-	Joint Venture agreement (if applicable)	
6	Form 4.5	Financial Data	
7	Form 4.6	List of on-going/committed Project indicating the value of outstanding works and experience on Solar PV market since January 2015 in Lebanon with proof of undertaking	
8	Form 4.12	List of Proposed Subcontractors (if applicable)	
9	Form 4.1	Form of Bid	Bidders are required to submit these documents **for each lot** for which the bidders offer
10	Form 4.2	Bill of Quantities	
11	Form 4.7	Work Schedule	
12	Form 4.8	Method and Design statement including all the required documents and drawings	
13	Form 4.9	Proposed assignment schedule of key supervisory staff	
14	Form 4.10	Curriculum vitae of proposed supervisory Staff	
15	Form 4.11	List of major construction equipment to be Mobilized	
16	Form 4.13	Proposed organization chart	
17	From 4.14	Technical Specifications Statement Sheet including supporting literature and manufacturer's authorisation letter	
18	Form 4.15	Schedule of Goods	
19	Form 4.16	Guarantee letter of the performance Ratio	
20	Form 4.17	Warrantee Form	

The aforementioned documents must be submitted to Beit El Baraka by the Closing time in the following manner.

Bid proposal: Original/Copy	Submitted to:	Closing time
Bidders must submit one (1) original envelope and one (1) full soft copy envelope: 1) One (1) original envelope Marked -"ORIGINAL" -Beit El Baraka 2) One (1) copy outer envelope Marked -"COPY"	To be submitted by hand or courier with tracking services to Beit El Baraka address Beirut, Karm el Zeitoun, Cheikh el Ghabi Street, Etihad building, GF.	17 June 2022 before 12 noon

In the event of any discrepancy between the hard copy and the electronic copy of the bid, the hard copy will prevail.

No bids will be rejected at bid opening stage except for late bids.

Beit El Baraka does not accept responsibility for the premature opening or mishandling of Bids that are not submitted in accordance with these instructions.

Any additional costs incurred by Beit El Baraka, their Employer or the End-User which result from any inaccuracies or any declarations in respect of the Goods or the bidder's failure to conform with the requirements of a resulting Contract will be charged to the bidder.

All original bids must be received by Beit El Baraka <u>by 17 June 2022 before 12 noon</u>

Any bid not sent to the correct address and/or received late will be rejected. A late bid will be any bid that is not received by Beit El Baraka by the closing time.

Table of Contents

Section 1	Instructions to Bidders
Section 2	Conditions of Contract
Section 3	Technical Requirements
Section 3.1	Scopes of Works and School List
Section 3.2	Drawings
Section 3.3	Technical Specification book for Works
Section 4	Bid Submission Forms
Form 4.0	Bidder Information Form
Form 4.1	Form of Bid
Form 4.2	Schedule of Activities
Form 4.4	Bid Security not applicable
Form 4.5	Financial Data
Form 4.6	List of On-going / Committed Projects [Bidder's Technical Proposal]
Form 4.7	Work Schedule
Form 4.8	Method and Design Statement
Form 4.9	Proposed Assignment Schedule of Key Supervisory Staff
Form 4.10	Form of Curriculum Vitae of Key Supervisory Staff
Form 4.11	List of Major Construction Equipment to be Mobilised
Form 4.12	List of Proposed Subcontractors (if any)
Form 4.13	Proposed Site Organisation
Form 4.14	Technical Specifications Statement Sheet
Form 4.15	Schedule of Goods
Form 4.16	Guarantee Letter for performance ratio
Form 4.17	Warrantee From
Section 5	Contract Form

SECTION 1
INSTRUCTIONS TO BIDDERS

The following points shall be observed in the preparation of your Bid:

Qualification: Additionally, bidders must meet the following criteria.

a) The bidder shall have revenue (turn over) of at least 400,000 USD per year in the past three years, which shall be confirmed in Form 4.5.

b) The bidder shall have a cumulative track record of at least 400kWp of previous and current experience in the Solar PV Market since 2015 in Lebanon, which shall be confirmed in Form 4.6. In the case of Joint Venture the cumulative experience of Joint Venture members will be considered. If the subcontractor is appointed in Form 4.12 List of Proposed Sub-Contractors and a corresponding Power of Attorney is issued from the sub-contractor to the main contractor, confirming their participation to the cumulative experience of the main contractor and sub-contractor will be considered.

Project completion date: the completion date for the works must not exceed 3 months from the Start Date, regardless of the number of lots a bidding company or joint venture is participating in.

Bid Pricing: The Contract shall be for the whole Works detailed in Section 3 of the IFB based on the priced Bill of Quantities for lump sum Contract submitted by the Bidder (Form 4.2).

The Bidder shall fill in the rates and prices for all items of the Works described /listed in the Bill of Quantities. no rate or price is entered by the Bidder will not be paid for by Beit El Baraka when executed and shall be deemed covered by the other rates and prices in the BOQ.

Unless otherwise stated in the Contract, the lump sum price quoted by the Bidder shall be fixed for the duration of the Contract and shall not be subject to any adjustment on any account.

Bidders are to note therefore that all prices quoted in forms 4.1, 4.2 which will comprise the Financial Bid should be inclusive of the above mentioned duties and taxes.

Currency of bid and payment: Prices shall be offered in the currency of USD (United States Dollar) and payment shall be made in the currency of the bid.

Bidder's Technical Proposal: Bidders are required to submit a Technical Proposal using the relevant forms in Section 4. The Technical Proposal should substantially comply with the requirements of Section 3, Technical Requirements. The documents comprising the Technical Proposal are as follows:

a) Form 4.7, Work Schedule;
b) Form 4.8, Method and Design Statement – brief description of the proposed installation methods, system design, etc., including drawings;
c) Form 4.9, Proposed Assignment Schedule of Key Supervisory Staff;
d) Form 4.10, Curriculum Vitae of Proposed Key Supervisory Staff;
e) Form 4.11, List of Major Equipment to be mobilised;
f) Form 4.12, List of Proposed Subcontractors (if any);
g) Form 4.13, Proposed Site Organization;

h) Form 4.14, Technical Specifications Statement Sheet, including required documents and drawings;
i) Form 4.15. Schedule of goods;
j) Form 4.16, Guarantee Letter for Performance Ratio ; and
k) Form 4.17, Warrantee Form

The Work Schedule should show the sequence of activities of the Works to complete the Contract within the Completion Date.

Completed Forms 4.9, and 4.10 should meet the Technical Evaluation Criteria set forth under Qualification and Evaluation Criteria. Completed Forms 4.7, 4.8, 4.12, 4.13, and 4.14 should substantially be responsive with Section 3 of the IFB. If the Bidder wishes to propose sub-contractors or Joint venture the detailed works arrangement of the sub-contractor or joint venture should be included in Form 4.8, Method and Design Statement.

One Bid per Bidder: Each Bidder shall submit only one Bid per lot individually or as a partner in a joint venture. Where a Bidder submits or participates in more than one bid per lot all bids in which the bidder is involved will be disqualified. Where a bidder participates as a joint venture partner in more than one bid per lot all bids in which the bidder is involved will be disqualified. A bidder may not act as a Bidder and a subcontractor to a different bidder in the same Lot and all bids in which the bidder is involved will be disqualified. This clause does not limit the inclusion of the same subcontractor in more than one bid.

Joint Venture Partners in a joint venture shall be jointly and severally liable for the execution of the Contract. All members of joint venture shall submit Form 4.0, Form 4.3, Form 4.5, and Form 4.6.
For Form 4.1, either all members shall sign or only the authorized representative, in which case the power of attorney to sign on behalf of all members shall be submitted together with Joint venture agreement. Joint venture agreement can be in any format

Beit El Baraka shall deal with the joint venture as a single entity. In the event of any conflict raised between the partners of the joint venture that would hinder the execution of the works and delay the delivery. Beit baraka have the right to terminate the contract to the responsibility of all the members of the joint venture as per article 38 of the conditions of contract.

Cost of Bidding: The Bidder shall bear all costs associated with the preparation and submission of its Bid.

Site Visits: Bidders are strongly advised to visit all the schools under the lot they are bidding for at their own discretion during the following period to obtain full information to prepare the design and bid. If a bidder should identify a school where it is impossible to install the required PV capacity, the bidder should notify the Beit El Baraka through the tender clarification process. Changes to the contents of the proposal and bid price at a later stage are not acceptable.

Clarification of bidding documents: A prospective Bidder requiring any clarification of the bidding documents shall notify Beit El Baraka in writing. It is the responsibility of the Bidder to ensure that the required clarifications be submitted to Beit El Baraka.

Any request for clarification of the bidding documents shall be submitted no later than **5 days before submission date**. Written copies of Beit El Baraka' response will be sent to all prospective Bidders. Requests for clarification and the response(s) shall form part of the resultant Contract.

Amendment of bidding documents: At any time prior to the deadline for submission of Bids, Beit El Baraka, for any reason, whether at its own initiative or in response to a clarification requested by a prospective Bidder, may modify the bidding documents by amendment.

All prospective Bidders will be notified of the amendment in writing, and the amendment will be binding on them.

In order to allow prospective Bidders reasonable time in which to take the amendment into account in preparing their Bids, Beit El Baraka, at its discretion, may extend the deadline for the submission of Bids.

Method of Evaluation: Bids will be evaluated in the following manner:

a. Preliminary Examination – to check that all documents comprising the Bid with any relevant supporting documents have been submitted in accordance with the Bid Submission instructions including bidder's eligibility. Bids that fail the preliminary examination will not be evaluated further. However, Beit El Baraka reserves the right to request a Bidder to clarify and or submit documents historic in nature that would not affect the substance and price of a Bid.

b. Financial Evaluation - The financial bids of only those bidders having passed the Preliminary evaluations shall be checked. The financial bids shall be checked for arithmetical errors to determine the corrected Bid Price and Bid prices shall be compared.

c. Qualification Evaluation - The qualification of Bidder will then be evaluated using the following pass-fail Qualification Criteria.

   i) Having at least cumulative 400kWp of previous and current experience in the Solar PV Market since 2015 in Lebanon, which shall be confirmed in Form 4.6. In the case of joint venture the cumulative experience of joint venture members will be considered. The employer relation shall be exclusively with main contractor

   ii) The bidder shall have revenue (turn over) of at least USD400,000 per year, which shall be confirmed in Form 4.5. In the case of joint venture, the cumulative revenue of the joint venture partners will be considered.

d. Technical Evaluation - The Bid shall be evaluated to determine the compliance of the technical specification in accordance with the following technical evaluation criteria.

   Technical Evaluation Criteria:

   i) Schedule is within the required period;

ii) Bidder complies with the Contract Conditions;

iii) Bidder complies with the Technical Specifications;

iv) Responsive preliminary work schedule that substantially complies with the requirements of Section 3;

v) Method and Design statement including drawings that substantially complies with the requirements of Section 3;

vi) Personnel: Bidder must demonstrate that he has available and qualified key supervisory staffs to supervise the works, as follows:

Position	Number	Minimum Experience in similar works (Years)
Team leader	1	Over 7 years of experience in the energy sector with at least 5 years-experience in solar PV industry.
Technical staff involved in the project	At least 2 staffs Per lot	Over 4 years of experience in the energy sector with at least 3 years-experience in solar PV industry.

Proposed key supervisory staff: Bidders shall submit CVs, in the format found in Form 4.10 of the IFB, with their Bid for the proposed team leader and other technical staffs demonstrating experience in Works of an equivalent nature and volume required above technical evaluation Criteria

vii) Bidder shall demonstrate that key supervisory staffs will be assigned adequately during the project.

viii) Responsive Site Organization demonstrating that Bidder is capable to satisfactorily perform the Contract, which shall be proposed in Form 4.13.

Completed Forms 4.7, 4.8, 4.12 4.13, and 4.14 should substantially be responsive with the relevant provisions of Section 2, Conditions of Contract and Section 3, Technical Requirements of this IFB.

A deviation is considered material if accepted would a) substantially affect the scope, limit, quality or performance of the Works, or b) limit in substantially way, inconsistent with the Bidding documents, the Employer's rights or Bidder's obligations under the proposed Contract. A bid with material deviation shall be rejected.

The Contract will be awarded to the highest combined score bid evaluated as follows

- Rating the Technical Proposal (TP):
  TP Rating = (Total Score Obtained by the Offer / Max. Obtainable Score for TP) x 100
- Rating the Financial Proposal (FP):
  FP Rating = (Lowest Priced Offer / Price of the Offer Being Reviewed) x 100
- Total Combined Score:
- Combined Score = (TP Rating) x (Weight of TP, e.g. 70%) + (FP Rating) x (Weight of FP, e.g., 30%)

Acceptance: Beit El Baraka reserve the right to accept or reject any Bid, and to annul the bidding process and reject all Bids at any time prior to Contract award, without thereby incurring any liability to the affected Bidder or Bidders.

Award and Signing of Contract: Award of Contract shall be in the form of the Works Contract given in Section 5.1 of the IFB. Within seven (7) working days of receipt of the Works Contract from Beit El Baraka, the successful Bidder shall sign, date and return it to the Beit El Baraka. Contract shall be signed in one original copy which shall remain with a 3rd party after the stamp duty payments is settled by the contractor

SECTION 2

CONDITIONS OF CONTRACT

CONDITIONS OF CONTRACT FOR THE PROCUREMENT OF WORKS

TABLE OF CLAUSES

A. General
1. Definitions
2. Interpretation
3. Language and Law
4. Communications
5. Subcontracting and Other Contractors
6. Personnel
7. Contractor's Risk
8. Insurance
9. Inspection of Site
10. Contractor to Construct the Works
11. The Works to be Completed by the Completion Date
12. Safety and Security

B. Time Control
13. Programme
14. Possession of the Site
15. Access to the Site
16. Extension of the Completion date
17. Acceleration
18. Delays Ordered by the Employer
19. Management Meetings
20. Early Warning

C. Quality Control
21. Identifying Defects
22. Correction of Defects
23. Uncorrected Defects

D. Cost Control
24. Contract Price
25. Change in the Quantities
26. Variations
27. Payment Certificates
28. Payments
29. Compensation Events
30. Taxes and Duties
31. Liquidated Damages
32. Advance Payment
33. Performance Guarantee
34. Cost of Repairs

E. Finishing the Contract
35. Completion and Take Over
36. Final Account
37. Operating and Maintenance Manuals
38. Termination
39. Fraud and Corruption
40. Payment Upon Termination

41. Property
42. Release from Performance
43. Pre-arbitral decisions by the Consultant.
44. Procedure for Disputes
45. Warrantee

BEIT EL BARAKA

CONDITIONS OF CONTRACT FOR THE PROCUREMENT OF WORKS

A. General

1. Definitions

1.1 The following words and expressions shall have the meanings hereby assigned to them:

(a) The **Schedule of Activities** means the priced Schedule of Activities comprising design, supply, construction, installation, training, testing and commissioning of the Works.

(b) **Bill of Quantities** means the priced and completed Bill of Quantities forming part of the Contract in a lump sum Contract.

(c) **Completion of Works** Certificate is the certificate issued by the Consultant upon satisfactory completion of the Works. Completion of Works Certificate shall be issued by the Consultant per lot when the commissioning and training are completed at each site. A Training Completion Certificate shall be issued and signed by the End-user at each site and a copy of the Training Completion Certificates shall be submitted by the Contractor to the Consultant.

(d) **Compensation Events** are those defined in Clause 29 hereunder.

(e) **Consultant** is the Employer's representative (or any other competent person appointed by the Employer and notified to the Contractor, to act in replacement of the Consultant) who is responsible for supervising the execution of the Works and administering the Contract.

(f) The **End-User are each of the nominated schools** who are the intended beneficiary of the Works.

(g) The **Contract** is the Works Contract between the Employer and the Contractor to execute, complete and maintain the Works for the benefit of the End-User.

(h) The **Contractor** is the party whose Bid to carry out the Works has been accepted by the Employer.

(i) The **Contractor's Bid** is the completed Bid submitted by the Contractor to the Employer.

(j) The **Contract Price** is the Works Contract Value as may be adjusted in accordance with the provisions of the Contract. Not applicable

(k) **Day**s are calendar days; weeks are calendar weeks; months are calendar months. Dayworks are varied work inputs subject to payment on a time basis for the Contractor's employees and Equipment, in addition to payments for associated Materials and Plant.

(l) A **Defect** is any part of the Works not completed in accordance with the Contract.

(m) The **Defects Liability** Certificate is the certificate issued by the Consultant upon correction of defects by the Contractor at the conclusion of the Defect Liability Period.

The Defects Liability Period is the period 365 days and calculated from the Completion Date.

As a special requirement for During Defect Liability Period, the Contractor shall visit each school at least once every 6 months (twice in one year) for checking and confirming the proper operation of the PV system. A schedule shall be agreed with the Employer. A Check list format for such reviews shall be agreed with the Employer in advance of any such visit. The Contractor shall submit an Outcome report regarding the result to the Employer with 1 week of the completion of the visit and the report must be endorsed by Employer's representative.

(n) **Drawings** mean the layout of the plant and Single Line Diagram of the Plant , and As-built drawing to be submitted by the Contractor for the approval of the Consultant, the Employer, the Employer, and the End-users for the execution of the Contract."

(o) The **Employer** is **Beit El Baraka** , who employs the Contractor to carry out the Works. The schools are listed in 3.2

(p) The **Equipment** is the Contractor's machinery and vehicles brought temporarily to the Site execute the Works.

(q) The **Completion Date** is the date on which it is intended that the Contractor shall complete the Works. The Completion Date shall be 3 months after the start date . The Completion Date may be revised only by the Consultant by issuing an extension of time.

(r) "**In Writing**" or "**Written**" means hand-written, typewritten, printed or electronically made, and resulting in a permanent record.

(s) **Materials** are all supplies, including consumables, used by the Contractor for incorporation in the Works.

(t) **Plant** is any integral part of the Works that shall have a mechanical, electrical, chemical, or biological function.

(u) The **Programme** is the programme showing the general method, arrangements, order and timings for all activities in the Works.

(v) **GCC** means the General Conditions of Contract.

(w) the **Sites** is the places where the works will be performed. The sites are located in the republic of Lebanon and are divided in 4 lots as mentioned in the list of schools section 3.2 of IFB

(x) The **Specifications** mean the Technical Specification Book for Works included in the Contract and any modification or addition made or approved by the Consultant.

(y) The **Start Date** is 5 days following the signature of the contract.

(z) A **Subcontractor** is a person or corporate body who has been proposed in the bid to have a Contract with the Contractor to carry out a part of the work in the Contract, which includes work on the Sites as approved by the Employer and the Employer in the bid evaluation stage. If applicable the contractor shall carry the works awarded by the sub-contractor under the responsibility of this latter.

(aa) **Temporary Works** are works designed, constructed, installed, and removed by the

Contractor that are needed for construction or installation of the Works.

(bb) **A Variation** is a written instruction given by the Consultant after getting the approval of the Employer that varies the Works.

(cc) The **Works** are what the Contract requires the Contractor to design, supply, construction and installation of solar PV systems in schools in Lebanon to the End-User.

2. Interpretation

2.1 In interpreting these GCC, words indicating one gender include all genders. Words indicating the singular also mean plural and the other way round. Headings have no significance. Words have their normal meaning under the language of the Contract unless specifically defined. The Employer shall provide instructions clarifying issues about these GCC.

2.2 The contractor technical Proposal shall form part of the Contract.

2.3 This Contract shall be a Lump Sum Contract based on priced Bill of Quantities.

3. Language and Law

3.1 The language of the Contract is English and the law governing the Contract is Republic of Lebanon.

4. Communications

4.1 Communications between parties that are referred to in the Contract Conditions shall be effective only when in writing.

5. Subcontracting and other Contractors

5.1 The Contractor may subcontract parts of the Works as proposed in the Bid and the sub-contractor's information Form shall form part of the Contract. Subcontracting shall not alter the Contractor's obligations. Not more than 50% of the Works may be sub-contracted. The Contractor shall cooperate and share the Site with other contractors, public authorities, utilities, and the Consultant.

6. Personnel

6.1 If the Consultant asks the Contractor to remove a person who is a member of the Contractor's staff or work force, stating the reasons, the Contractor shall ensure that the person leaves the Site immediately and has no further connection with the Works. Same is applicable to the subcontractor and his personnel

6.2 The Consultant will approve any proposed replacement of key personnel only if their relevant qualifications and abilities are substantially equal to or better than those of the personnel proposed in their Bid.

6.3 All costs associated with the removal or replacement of the Contractor's personnel shall be Borne by the Contractor.

6.4 Personnel of the contractor have with the Employer/ Consultant. Contractor is responsible for the behavior of his personnel

7. Contractor's Risks

7.1 From the Start Date until the Defects Liability Certificate has been issued, the following are contractor's risks:

(a) The risk of personal injury, death, or loss of or damage to property (excluding the Works, Plant, Materials, and Equipment), which are due to use or occupation of the Site by the Works or for the purpose of the Works, which is the unavoidable result of the Works or
(b) negligence, breach of statutory duty, or interference with any legal right by the Client or by any person employed by or contracted to him except the Contractor.
(c) The risk of damage to the Works, Plant, Materials, and Equipment to the extent that it is due to a fault of the end-user,

7.2 From the Completion Date until the Defects Liability Certificate has been issued, the risk of loss of or damage to the Works, Plant, and Materials is the Client 's risk except loss or damage due to

(d) a Defect which existed on the Completion Date,
(e) an event occurring before the Completion Date, which was not itself a Client's risk, or
(f) the activities of the Contractor on the Site after the Completion Date.

7.3 From the Starting Date until the Defects Liability Certificate has been issued, the risks of personal injury, death, and loss of or damage to property (including, without limitation, the Works, Plant, Materials, and Equipment) which are not Client's risks are Contractor's risks

8. Insurance

8.1 The Contractor shall at its expense take out and maintain in effect, or cause to be taken out and maintained in effect, during the performance of the Contract, the insurances set forth below in the sums and with the deductibles and other conditions specified.

the Employer shall be named as the beneficiary and the Contractor as the loss payee under all insurance policies taken out by the Contractor, except for third party insurance, workers' compensation and employer's liability insurances, and for insurance taken out by the Contractor's Subcontractors.

(a) Installation All Risks Insurance covering the replacement costs of the Plant and Materials resulting from physical loss or damage to the Plant and Materials at the Site, occurring prior to Completion of the Works, with an extended maintenance coverage for the Contractor's liability in respect of any loss or damage occurring during the defect liability period while the Contractor is on the Site for the purpose of performing its obligations during the defect liability period. The Plant and Materials shall be insured in the currency of the Contract, with a first class insurance company. The insurance shall be for 110 per cent of the replacement value of the Plant and Materials.

(b) Third Party Liability Insurance covering bodily injury or death suffered by third parties (including the Employer's or Consultant's personnel) and loss of or damage to property (including the Employer's property, adjacent property and any parts of the Plant and Materials which have been accepted by the Consultant) occurring in connection with the supply and installation of the Plant and Materials. The level of Third Party Liability must be provided in accordance with the statutory requirements applicable in any country where the Works or any part thereof is executed.

(c) Workers' Compensation in accordance with the statutory requirements applicable in Lebanon

9. Inspection of Site

9.1 The Contractor shall be deemed to have inspected and examined the Site and its surroundings and to have satisfied himself before submitting his Bid and signing the Contract as to all matters relative to the nature of the land and subsoil, the form and nature of the Site and the existing structure on which the solar panel shall be mounted, details and levels of existing pipe lines, conduits, sewers, drains, cables or other existing services, the quantities and nature of the work and materials necessary for the completion of the Works, the means of access to the Site, and in general to have himself obtained all necessary information as to risk contingencies, climatic, hydrological and natural conditions and other circumstances which may influence or affect his Bid, and no claims will be entertained in connection with these matters against the Employer.

10. Contractor to execute the Works

10.1 The Contractor shall perform; execute and complete the Works in accordance with the Contract including the Specifications.

11. The Works to be Completed by the Completion Date

11.1 The Contractor shall commence performance of the Works on the Start Date and shall carry out the Works in accordance with the Programme submitted by the Contractor, as updated with the approval of the Consultant, and complete them by the Completion Date.

12. Safety and Security

12.1 The Contractor shall be responsible for the safety of all activities on the Site.

12.2 The Contractor shall in connection with the Works provide and maintain at his own cost all lights, guards, fencing and watching when and where necessary or required by the Consultant or by any duly constituted authority for the protection of the Works and the materials and equipment utilized therefore or for the safety and convenience of the public or others.

B. Time Control

13. Programme

13.1 Within the time **5 days**, the Contractor shall submit to the Consultant for approval a Programme showing the general methods, arrangements, order, and timing for all the activities in the Works. the activities in the Programme shall be consistent with the Schedule of Activities.

13.2 An update of the Programme shall be a Programme showing the actual progress achieved on each activity and the effect of the progress achieved on the timing of the remaining work, including any changes to the sequence of the activities.

13.3 The first submitted Programme must include, but is not limited to, the information relating to location plan of each school which has been agreed with each school representative, installation schedule, commissioning, and training schedule for the approval of the Consultant and the employer

14. Possession of the Sites

The End-Users shall arrange to allow entry to all parts of the Sites to the Contractor as are relevant and necessary to the execution of the Works. If entry permission is not given by as requested by the Contractor, the End- User shall be deemed to have delayed the start of relevant activities and this shall be reflected in a revised agreed Programme End users shall secure the site and prevent any person to step in the site or to have access to the equipment and materials

15. Access to the Sites

15.1 The Contractor shall allow the Consultant and any person authorized by the Consultant access to the Sites and to any place where work in connection with the Contract is being carried out or is intended to be carried out.

16. Extension of the Completion Date

16.1 The Employer in consultation with the Consultant shall extend the Required Completion Date if a Compensation Event occurs or a Variation is issued which makes it impossible for Completion to be achieved by the Required Date without the Contractor taking steps to accelerate the remaining work, which would cause the Contractor to incur additional cost.

17. Acceleration

17.1 When the Employer wants the Contractor to finish before the Required Completion Date, the Employer shall obtain a priced proposal for achieving the necessary acceleration from the Contractor. If the Employer with the prior approval of the Consultant accepts this proposal, the Required Completion Date shall be adjusted accordingly and confirmed in writing by both the Employer and the Contractor.

18. Delays Ordered by the employer

18.1 The Employer may instruct the Contractor in writing, to delay the start or progress of any activity within the Works.

19. Management Meetings

19.1 Either the Consultant and the Contractor shall attend a weekly management meeting in the presence of the Employer or his representative. The business of a management meeting shall be to review the plans for remaining work and to deal with matters raised in accordance with the early warning procedure detailed.

19.2 The Consultant shall record the business of management meetings and provide copies of the record to those attending the meeting and the Employer. The responsibility of the parties for actions to be taken shall be decided by the Consultant either at the management meeting or after the management meeting and stated in writing to all who attended the meeting.

20. Early Warning

20.1 The Contractor shall warn the Consultant at the earliest opportunity of specific likely future events or circumstances that may adversely affect the quality of the work, or delay the execution of the Works. The Consultant shall require the Contractor to provide an estimate of the expected effect of the future event or circumstance on the Contract Price and Completion Date in writing. The estimate shall be provided by the Contractor as soon as reasonably possible.

20.2 The Contractor shall co-operate with the Consultant in making and considering proposals for how the effect of such an event or circumstance can be avoided or reduced by anyone involved in the work and in carrying out any resulting instruction of the Consultant.

C. Quality Control

21. Identifying and Testing Defects

21.1 The Consultant shall check the Contractor's work and notify the Contractor of any Defects that are found. Such checking shall not affect the Contractor's responsibilities. The Consultant may instruct the Contractor to search for a Defect and to uncover and test any work that the Consultant considers may have a Defect.

22. Correction of Defects

The End-user shall give notice to the Contractor of any Defects during the Defect Liability Period, which begins at Completion. The Defects Liability Periods shall be extended for as long as Defects remain to be corrected or the contract terminated

Every time a notice of Defect is given, the Contractor shall respond in 48 hours of such notification and correct the notified Defect as soon as practically possible in consultation with the End-user. If the replacement of the Materials is required, this must be approved by the employer in advance of remedial action being taken to rectify the defect in question

23. Uncorrected Defects

The Performance Guarantee shall be returned to the Contractor once the End-user and the Employer confirm to the Employer that all the defects are shown to have been corrected in the Defect Liability Certificate and not earlier than 6 months from the issue of the Certificate of Completion

D. Cost Control

24. Contract Price

24.1 The Contract shall be on a lump basis and the Bill of Quantities shall contain the priced activities for the Works to be performed by the Contractor. The Schedule of Activities is used to monitor and control the performance of activities. The Contractor shall be paid the Lump Sum or as varied by issued Variation Orders

25. Change in the Quantities

25.1 The Schedule of Activities shall be amended by the Contractor, subject to the approval of the Consultant and Employer, to accommodate changes of programme or method of working made at the Contractor's own discretion. Prices in the Bill of Quantities shall not be altered when the Contractor makes such changes to the Bill of Quantities.

26. Variations

26.1 All Variations shall be included in updated Programmes and in the Bill of quantities, produced by the Contractor.

26.2 The Contractor shall provide the Employer with an offer to carry out the Variation when requested to do so by the Consultant. The Consultant shall assess the offer, which shall be given within seven (7) days of the request or within any longer period stated by the Employer and before the Variation is ordered.

26.3 The Contractor shall not be entitled to additional payment for costs that could have been avoided by giving early warning.

27. Payment Certificates

27.1 The Contractor shall submit to the Consultant monthly statements of the estimated value of the work executed less the cumulative amount certified previously.

27.2 The Consultant shall check the Contractor's monthly statement and certify the amount to be paid to the Contractor that shall be notified to the Employer in writing.

27.2 The value of work executed shall be determined by the Consultant, and shall comprise the value of the satisfactorily completed activities in the Schedule of Activities.

28. Payments

28.1 Payments shall be adjusted for deductions for advance payments and retention. The Employer shall pay the Contractor the amounts certified by the Consultant within 30 days of the date of receipt by the Employer of each certificate and original signed invoice.

28.2 all payments and deductions shall be paid or charged in the currency comprising the Contract Price.

28.3 Items of the Works for which no rate or price have been entered in the Bill of Quantities will not be paid for by the Employer and shall be deemed covered by other rates and prices in the Contract.

29. Compensation Events

29.1 The following shall be Compensation Events:

(a) The Employer does not arrange to give access to a part of the Site by the Site Possession

(b) The Consultant gives an instruction for dealing with an unforeseen condition, caused by the End-User, or additional work required for safety or other reasons.

29.2 The Contractor shall not be entitled to compensation to the extent that the Employer's interests are adversely affected by the Contractor not having given early warning or not having cooperated with the Consultant.

30. Taxes and duties

30.1 The Contractor is liable for all taxes and duties in accordance with the laws of Lebanon. The Consultant shall not adjust the Contract Price if taxes, duties, and other levies are changed that subsequently affect the Contract Price.

31. Delays Penalties

31.1 The Contractor shall pay delays penalties to the Employer at the rate 500 USD per day for each day that the completion date is later than the required Completion Date. The total amount of delays penalties shall not exceed the 10 per cent of the contract amount. The Employer may deduct delays penalties from any payments due to the Contractor. Payment of delays penalties shall not affect the Contractor's liabilities.

32. Advance Payment

32.1 The Employer shall make an Advance Payment to the Contractor of the amounts **10 per cent**, against provision by the Contractor of an Irrevocable and Unconditional Bank Guarantee provided from fresh fund account in the format **described below** and by a bank acceptable to

the Employer in amounts and currencies equal to the Advance Payment. Interest shall not be charged on the advance payment. Any repaid amount on the equipment and material and the guarantee reduces in proportion would comply the exclusive proprietorship of such equipment and materials to the employer

32.2 The Contractor is to use the Advance Payment only to pay for Equipment, Plant, Materials and other mobilisation expenses required specifically for carrying out the Works. The Contractor shall demonstrate that the Advance Payment has been used in this way by supply of copies of invoices or other documents to the Consultant.

32.3 The Advance Payment shall be repaid by deducting proportionate amounts from payments otherwise due to the Contractor, to be recovered during the Programme period.

33. Performance Guarantee

33.1 The Performance Guarantee shall be 10 percent of the Contract Price and shall be provided from a fresh fund account within ten (10) working days of Contract signing date by both the Employer and the Contractor as a condition precedent to the effectiveness of the Contract. This guarantee shall remain valid and in full effect until a date 28 days from the date of the issue of the Completion of Works Certificate under the Contract whereafter it shall reduce to the amount of five (5) percent. The Performance Guarantee shall be returned to the Contractor once the End-user and the Employer confirm to the Employer that all the defects have been corrected in the Defect Liability Certificate and not earlier than 12 months from the issue of the Certificate of Completion.

34. Cost of Repairs

34.1 Loss or damage to the Works or Materials to be incorporated in the Works between the Start Date and the end of the Defects Liability Period shall be remedied by the Contractor at the Contractor's cost.

E. Finishing the Contract

35. Completion and Taking Over

35.1 The Contractor shall request the Consultant to issue a Completion of Works Certificate, and the Consultant shall do so upon deciding that the whole of the Works is satisfactorily completed.

35.2 The Employer shall take over the Site and the Works within seven days of the Consultant's issuing of a Certificate of Completion of Works.

36. Final Account

36.1 The Contractor shall supply the Consultant with a detailed account of the total amount that the Contractor considers payable under the Contract before the end of the Defects Liability Period.

The Consultant shall issue a Defects Liability Certificate and certify any final payment that is due to the Contractor within 56 days of receiving the Contractor's account if it is correct and complete. If it is not, the Consultant shall issue within 56 days a schedule that states the scope of the corrections or additions that are necessary. If the Final Account is still unsatisfactory, the Consultant shall decide on the amount payable to the Contractor and issue a payment certificate. If the corrections are not remedied, the employer shall hire another contractor to execute the repairs of the defects at the contractor cost and withhold the amounts of such works from the final account or retention money.

37. Operating and Maintenance Manuals

the Contractor must supply the Drawings and/or manuals required upon the approval of the Consultant to each End -user upon the Completion of training at each school and must be certified in the Training Completion Certificate to be issued by each End-User.

the Contractor must include these documents in the Final report and submit to the Consultant so that the Consultant can submit them to Employer and the Employer. Submission of the Final report must be certified in the Completion of Works Certificate per lot.

If the required drawings, manuals, and other documents are not submitted by the Contractor neither the Training Completion Certificate, the Completion of Works Certificate shall not be issued.

38. Termination

38.1 The Employer may terminate the Contract if the Contractor causes a fundamental breach of the Contract.

38.2 Fundamental breaches of Contract shall include, but shall not be limited to, the following:

(a) the Contractor stops work for 15 Days when no stoppage of work is shown on the current Programme and the stoppage has not been authorized by the Consultant;

(b) the Contractor is made bankrupt or goes into liquidation other than for a reconstruction or amalgamation;

(c) the Consultant gives Notice that failure to correct a particular Defect is a fundamental breach of Contract and the Contractor fails to correct it within a reasonable period of time determined by the Consultant;

(d) the Contractor does not maintain a Bank Guarantee, which is required;

(e) the Contractor has delayed the completion of the Works by the number of days for which the maximum amount of delays penalties can be paid,

(f) if the Contractor, in the judgement of the Employer has engaged in corrupt or fraudulent practices in competing for or in executing the Contract

(g) If the contractor causes damages on the end user properties

38.3 When the Employer gives notice of a breach of Contract to the Consultant for a cause other those listed, the Consultant shall decide whether the breach is fundamental or not.

38.4 Notwithstanding the above, the Employer may terminate the Contract for convenience.

38.5 If the Contract is terminated, the Contractor shall stop work immediately, make the Site safe and secure, and leave the Site soon as reasonably possible.

39. Fraud and Corruption

39.1 If the Employer determines that the Contractor has been engaged in corrupt, fraudulent, collusive, coercive or obstructive practices, in competing for or in executing the Contract, then the Employer may, after giving 14 days' notice to the Contractor, terminate the Contractor's employment under the Contract and expel him from the Site,

39.2 Should any employee of the Contractor be determined to have engaged in corrupt, fraudulent, collusive, coercive or obstructive practice during the execution of the Works, then that employee shall be removed in accordance with Clause 6.

39.3 For the purpose of this Sub-Clause:

(i) "corrupt practice" means the offering, giving, receiving or soliciting, directly or indirectly, of anything of value to influence improperly the actions of another party;

(ii) "fraudulent practice" means any act or omission, including a misrepresentation, that knowingly or recklessly misleads, or attempts to mislead, a party to obtain a financial or other benefit or to avoid an obligation;

(iii) "collusive practice" means an arrangement between two or more parties, with without the knowledge of the Employer, designed to achieve an improper purpose, including to influence improperly the actions of another party;

(iv) "coercive practice" means impairing or harming or threatening to impair or harm, directly or indirectly, any party or the property of the party to influence the actions of a party;

(v) "obstructive practice" is

(aa) deliberately destroying, falsifying, altering or concealing of evidence material to the investigation or making false statements to investigators in order to materially impede an investigation by the Employer into allegations of a corrupt, fraudulent, coercive or collusive practice; and/or threatening, harassing or intimidating any party to prevent it from disclosing its knowledge of matters relevant to the investigation or from pursuing the investigation; or

(bb) acts intended to materially impede the exercise of the Employer's inspection.

40. Payment upon Termination

40.1 If the Contract is terminated because of a fundamental breach of Contract by the Contractor, the Consultant shall issue a certificate for the value of the work done and Materials ordered less advance payments made up to the date of the issue of the certificate and less 20 percent of the value of the work not completed. Delays penalties shall not apply. If the total amount due to the Employer exceeds any payment due to the Contractor, the difference shall be a debt payable to the Employer.

43.2 If the Contract is terminated for the Employer's convenience, the Consultant shall issue a certificate for approval by the Employer for the value of the work done, Materials ordered, the reasonable cost of removal of Equipment, repatriation of the Contractor's personnel employed solely on the Works, and the Contractor's costs of protecting and securing the Works, less advance payments made up to the date of the certificate.

41. Property

41.1 All Materials and equipment on the Site, Temporary Works, and Works shall be deemed to be the property of the Employer.

41.2 For the purpose of completing the Works, if the Contract is terminated because of the Contractor's default, all Construction Equipment and Plant on the Site shall be deemed to be the property of the Employer.

42. Release from Performance

42.1 If the Contract is frustrated by the outbreak of war or by any other event entirely outside the control of either the Employer or the Contractor, the Consultant shall certify that the Contract has been frustrated. The Contractor shall make the Site safe and stop work as quickly as possible after receiving this certificate and shall be paid for all work carried out before receiving it and for any work carried out afterwards for which an agreement has been reached. Or once the outbreak is over an assessment of the damages shall be carried and the employer may choose either to execute the repairs or to terminate the contract.

43. Pre-arbitral decisions by the Consultant.

43.1 The Parties to the Contract are encouraged to settle any dispute amicably by direct negotiation. In the event that the dispute cannot be settled amicably, the dispute shall be referred to the Consultant who shall act fairly and impartially in attempting to reach a settlement acceptable to both Parties.

43.2 If the Consultant's decision is not acceptable to either or both of the Parties, the matter will be referred to formal arbitration in accordance with the provisions of Clause 44 below.

44. Procedure for Disputes

44.1 The Employer and the Contractor shall make every effort to resolve amicably by direct informal negotiation any disagreement or dispute arising between them under or in connection with the Contract. If after thirty (30) days from the commencement of such informal negotiations, the Employer and the Contractor have been unable to resolve amicably a contractual dispute, either party may require that the dispute be referred for resolution to three independent qualified professional people, one chosen by the Employer and one chosen by the Contractor and the third chosen by an appropriate professional body, such as the Chamber of Commerce. The three should arrive at a solution satisfactory to the Employer and the Contractor. In case of further disagreement either party can take the matter to arbitration in accordance with the Law governing the Contract. The place where arbitration will take place will be in Lebanon

45. Warrantee

In regard to warrantee claims submitted by the End-user to the Contractor pursuant to the Warrantee Letter, the Contractor shall send an initial response within 48 hours from receipt of the original claim. In the event any part of the materials is replaced under a Warrantee claim submitted by the End-user, the Contractor shall advise the Employer of the replaced item in advance of actual installation. On successful completion of a claim the Contractor shall report to the Employer and provide full details of the claim.

SECTION 3 TECHNICAL

REQUIREMENTS

Section 3.1 Scope of Works

3.1.1 High Level Scope of Works: A high level description of the services that the Contractor will be required to provide are shown in the following table in the column entitled "PV system bidder/Contractor"

No	Description of works	Schools	Beit El Baraka (Employer)	Consultant	PV system bidder/ Contractor
1.	Permission to access each school by consultant, bidder, contractor	●			
2.	Prepare technical specification of the PV systems			●	
<Contractor' s tender stage >					
3.	Tender management for procurement and installation of PV system		●	●	
4.	Preparing answers to the bidders regarding the technical issues in the clarification process		●	●	
5.	Technical evaluation of bids including the approval of the proposal drawing plan submitted by PV system bidders.			●	
6.	General evaluation and contract issue to the successful		●	●	
<Contract stage>					
7.	Submission of a copy of insurance policy				●
8.	Submission of the first submitted Programme (inception report) including the layout plan approved by each school, which shall be submitted within 5 days of the Contract				●
9.	Approval of Insurance Policy submitted by the Contractor		●	●	

No	Description of works	Schools	Beit El Baraka (Employer)	Consultant	PV system bidder/ Contractor
10.	Approval of the initial Programme (inception report) including location plan submitted by the		●	●	
11.	Supply and installation of the PV systems				●
12.	Quality check of the supplied Goods at the pilot schools			●	●
13.	Supervision of the installation process		●	●	
14.	Preparation of as-built drawing for all schools before commissioning				●
15.	Commissioning test				●
16.	Supervision of Commissioning test at all schools		●	●	
17.	Approval of as-built drawing for all schools at the commissioning			●	
18.	O&M Training for solar system to be signed by each End-User				●
19.	Supervision of the training			●	
20.	Issue of Completion of Works Certificate per lot			●	●
21.	Outcome monitoring report submission		●		●
22.	School visits under the special requirements during DLP (twice a year)		●		
23.	Report of the defect during Defect Liability Period to the Contractor		●		●
24.	Correction of the defect under DLP				●
25.	Follow up on the defect repair	●	●		
26.	Release of Performance security for contractors upon the approval of the Employer		●		

3.1.2 Schools List:

No.	Code	School	Location	Google Maps Location	Contact Person	Phone Number
1	F001	1-FC Ecole Notre Dame De La Paix Kobayat	Koubayat, Tripoly	https://goo.gl/maps/8X7zMDx4hQnWLNmt8	Sr. Antoinette Azar	70143025
2	F006	6-Ecole St Maroun Des Pères Antonins Hadath	Baabda	https://goo.gl/maps/4Dsa6bKJasyzzhLA7	Pr. Ghanem jabbour	70591135
3	F009	9-SSCC Fakiha Ras Baalbeck	Fakiha	https://goo.gl/maps/PoeAuuGa5GorSzhC9	Sr. Hyam Habib	71789759
4	F015	15-Collège des Soeurs du Rosaire Abdin	Abdin	https://goo.gl/maps/KmDHhyvbudTJevLd6	Sr. Ludgar Rahme	70106354
5	F026	26-FC Saint Vincent De Paul Clémenceau	Climenceau Beirut	https://goo.gl/maps/YLHKCEV5YALQJYEa8	Sr. Vincent Allouan	03779080
6	F029	29-Ecole Notre Dame Du Liban Des Soeurs Antonines Rmeich	Rmeich	https://goo.gl/maps/NahfpEKWUGePzxv88	Sr. Marie Nassar	70530611
7	F030	30-SSCC - Ecole Saint	Ain ebel	https://goo.gl/maps/EB4tKga6c7SHqxm79	Sr. Maya El Beaino	70820524

No.	Code	School	Location	Google Maps Location	Contact Person	Phone Number
		Joseph Ain Ebel				
8	F032	32-FC - Rmaile	Rmaile	https://goo.gl/maps/Ro5U5MRnV5HxZTR96	Sr. Wadia Tabet	70207758
9	F033	33-SSCC Damour	Damour	https://goo.gl/maps/U28HuGfXu3kLVaDE9	Sr. Raghida	71724546
10	F034	34-Collège Mar Abda-Deir El Qamar	Deir El Qamar	https://goo.gl/maps/KDonEzkJhKep9DHo8	Pr. Antoine EL koueiry	03433592
11	F035	35-Ecole St Joseph De L'Apparition-Deir El Qamar	Deir El Qamar	https://goo.gl/maps/HeMaqNvySAxHnaVeA	Liliane Abou Rjeily	70320881
12	F036	36-Ecole El Marj-Chouf Baaklin	Baaklin	https://goo.gl/maps/YJtAL7CAeaCcNiEi6	Rabia Daou	03753417
13	F037	37-Ecole Saint Charbel Jiyeh	Jiyeh	https://goo.gl/maps/BQeq7vQ4YhUcgzMs6	Pr. Charbel Azzi	03610228
14	F039	39-Institut Filles De Marie Auxiliatrice De Don Bosco Kartaba	Kartaba	https://goo.gl/maps/Zc45QdvbFhSv3u6y9	Sr. Georgette Khoury	03636311
15	F041	41-Collège De L'Ange	Jbeil	https://goo.gl/maps/RLEA1RmazF8GzgYWA	Rania Gharios	70178815

No.	Code	School	Location	Google Maps Location	Contact Person	Phone Number
		Gardien - Blat				
16	F042	42-Collège Des Soeurs Du Rosaire Jbeil	Jbeil	https://goo.gl/maps/moWioECXeNiSiWMs5	Sr. Anastasie Mousallem	70136063
17	F043	43-Collège Notre Dame De Machmouché	Jezzine	https://goo.gl/maps/EbFkxjCkgWje7hmx7	Pr. Bassam Habib	70155700
18	F046	46-FC-Zouk Mikeal Affaires Sociales Vierge Puissante	Zouk Mikael	https://goo.gl/maps/NLTgyyccgUXTnwML7	Sr. Latife Fayad	03311065
19	F047	47-FC-Sainte Louise Ajaltoun	Ajaltoun	https://goo.gl/maps/Ak36sjdKFfFJU2MEA	Sr. Zahia	03860026
20	F050	50-Collège Saint Roch Mrah El Mir Kleiat	Ajaltoun	https://g.page/SRSLebanon?share	Pr. Wadih Skayem	03968666
21	F061	61-Marjeyoun National College	Marj Aayoun	https://goo.gl/maps/x4TZM1DJUxxzwQzY8	Imad Khoury	03957325
22	F063	63-SSCC Mrouj	Mrouj	https://goo.gl/maps/hxMoEVwKAp36KTb47	Sr. Antoinette Andraos	03877719

No.	Code	School	Location	Google Maps Location	Contact Person	Phone Number
23	F064	64-Ecole des frères Maristes - Champville-Dik El Mehdi	Mazreaet Yachoua	https://goo.gl/maps/aWceTm8exDZv7QKSA	Roland Bouzerdan	81738514
24	F065	65-FC-Saint Vincent De Paul Broumana	Broummana	https://goo.gl/maps/Lxhppx8j8iXnHQcr7	Nada Farhat/Sr. Edna	04960026/03326053
25	F066	66-Saint Georges Khenchara	Khenshara	https://goo.gl/maps/8SSuTeczRmW969zRA	Sr. Mona Farah	71314145
26	F067	67-Sainte Famille Maronite - Notre Dame de la Délivrance - Zalka	Zalka	https://goo.gl/maps/KQKeTE6N2bqU3ac98	Sr. Layla Abi Chebli	71518209
27	F073	73-Soeurs De La Charité De Besançon Baskinta	Baskinta	https://goo.gl/maps/R2R2ZSsU1XztyRTq5	Sr. Marie Harika	76689863
28	F075	75-Collège Des Soeurs Du Rosaire Mountazah	Mansouriyyeh	https://goo.gl/maps/3Rd1CXSYDRSfnayN7	Sr. Aquilina Khayrallah	71087895
29	F078	78-Notre Dame du Mont Carmel Fanar	Fanar	https://goo.gl/maps/PMyb8s3c9Rv4NkW87	Sr. Maddalena (Bahia Hanna)	03576465

No.	Code	School	Location	Google Maps Location	Contact Person	Phone Number
30	F081	81-Collège De La Sainte Famille Francaise Fanar	Fanar	https://goo.gl/maps/QHQgehsy48ipimyD6	Sr. Clemence Haddad	70424145 - 01890010
31	F084	84-SSCC Kharroube	Bikfaya	https://goo.gl/maps/PNfJPqcSVEHmG2B17	Sr. Rita Aoun	70167515
32	F086	86-Mekhitarist School	Sad El Bouchriyeh	https://goo.gl/maps/y5ZaQuyxF6MWXBo67	Yeghssig Sarkissian/Pr. Gorun Jenanian	81433257/70254795
33	F087	87-Collège Notre Dame Des Soeurs Antonines Nabatiyeh	Nabatiyeh	https://goo.gl/maps/x2XUETi6VfwKzBas9	Sr. Marie Touma	71748597
34	F088	88-Collège Des Soeurs Du Rosaire-Maamrieh / Saida	Saida	https://goo.gl/maps/XHjFd6kQi5zYQWGc6	Sr. Romana	03156113
35	F096	96-SSCC Machghara	Machghara	https://goo.gl/maps/1PyjZ23XcPqEMqVF9	Sr Colette Moughabghab	08650350
36	F097	97-North Lebanon College (Al Kalima School - St. Anthony)	Zgharta	https://goo.gl/maps/NgpftbJGmUes7r6P7	Pr. Joseph Sleiman	71550799
37	F102	102-Archevêché Maronite	Zalka	https://goo.gl/maps/2dKGehJvVQW2bZYJ9	Rabih Khattar	76544949

No.	Code	School	Location	Google Maps Location	Contact Person	Phone Number
		D'Antélias-Collège Saint Georges Zalka				
38	F106	106-Ecole Al Moutran Barsa	Barsa, Tripoli	https://goo.gl/maps/SaPsHr5GkgArAxu49	Pr. Marcel Nasta	03679213
39	F108	108-Ecole Al Moutran Chekka	Chekka	https://goo.gl/maps/NKm37m25JwdhuY9k9	Pr. Marcel Nasta	03679213
40	F109	109-Ecole Al Moutran Daher El Ain	Tripoli	https://goo.gl/maps/rg8YmK6VLV7MJJAK6	Pr. Marcel Nasta	03679213
41	F112	112-Ecole Al Moutran Zaytoun	Barsa, Tripoli	https://goo.gl/maps/3kTWHNHdFSW2fAxw8	Pr. Marcel Nasta	03679213
42	F113	113-Ecole Al Moutran Al Menye	Minye	https://goo.gl/maps/FyvVsRDR2vWmsBsp8	Pr. Marcel Nasta	03679213
43	F150	150 - Ecole Orthodoxe Secondaire	Kobbe, Tripoli	https://maps.google.com/?cid=730568874396390146	Elie Bitar	03613827

3.1.3 Documentation to be submitted

	Contents	Deadline	Submitted to	
1	Programme (Inception report)	Schedule Work plan Layout plan for each school Civil Structure Design Note for each school Single line Diagram	Within 2 weeks of the Contract date	Digital copy by email to Employer and Consultant
2	progress report	The Contractor shall report the progress of activities regarding -site preparation -procurement -delivery status -installation -commissioning -training in the updated Programme and submit it to the Consultant for review and approve	Bi-weekly	Digital copy by e- mail to Consultant
3	Necessary documents to each school	-necessary warranties; -Goods list to each school; -final as-built drawing to each school; -operation and maintenance manuals including the data sheet, contact information, single line diagram, electrical, mechanical, and civil work information; -all documents and information necessary for any licenses	To be submitted upon the completion of training at each school and must be certified in the Training completion certificate to be issued by each school	One original to each school representative

4	Final report	• 1 set of CD-ROMs each containing - Actual work schedule; - Copy of necessary warranties related to each school;	To be submitted upon the completion of the commissioning at all school and must be certified in the Completion of Works Certificate	To Consultant (Consultant shall submit CD-ROMs and necessary documents to the Employer
		- Goods list to each school; - Final as-built drawing for each school - Operation and maintenance manuals including the data sheet, contact information, single line diagram, electrical, mechanical, and civil work information - Copy of the Training Completion Certificate signed and issued by each school - Pictures of PV system of each school • One set of copy of manuals for the Employer for reference **(hard copy)**		

3.2 DRAWINGS - ATTACHEMENT 1

3.3 TECHNICAL SPECIFICATION BOOK FOR WORKS - ATTACHEMENT 2

SECTION 4

BID SUBMISSION FORMS

N**ote**
The forms in this section are required to be completed and submitted by Bidders unless otherwise indicated in the Instructions to Bidders.

Form 4.0 BIDDER INFORMATION FORM

Form 4.1 FORM OF BID

Form 4.2 BILL OF QUANTITIES

Form 4.4 BID SECURITY FORM – not applicable

Form 4.5 FINANCIAL DATA

Form 4.6 LIST OF ON-GOING/COMMITTED PROJECTS

Form 4.7 WORK SCHEDULE

Form 4.8 METHOD AND DESIGN STATEMENT

Form 4.9 PROPOSED ASSIGNMENT SCHEDULE OF KEY SUPERVISORY STAFF

Form 4.10 CURRICULUM VITAE OF PROPOSED KEY SUPERVISORY STAFF

Form 4.11 LIST OF MAJOR CONSTRUCTION EQUIPMENT TO BE MOBILIZED

Form 4.12 LIST OF PROPOSED SUBCONTRACTORS

Form 4.13 PROPOSED ORGANISATION

Form 4.14 TECHNICAL SPECIFICATIONS STATEMENT SHEET

Form 4.15 SCHEDULE OF GOODS

Form 4.16 GURANTEE LETTER FOR PERFORMANCE RATIO

Form 4.17 WARRANTEE FORM

Form 4.0

BIDDER INFORMATION FORM

[All individual firms and each partner of a Joint Venture submitting bid are requested to complete the information in this form, separately]

Lot No	[to be specified]
Bidder's name:	*[insert full name]*
In case of Joint Venture (JV), name of each member:	*[insert full name of each member in JV]*
Bidder's actual or intended country of registration: attach copy	*[indicate country of Constitution]*
Bidder's actual or intended year of incorporation:	*[indicate year of Constitution]*
Bidder's legal address [in country of registration]:	*[insert street/ number/ town or city/ country]*
Bidder's authorized representative information **Name:** **Address:** **Telephone/Fax numbers:** **E-mail address:**	 *[insert full name]* *[insert street/ number/town or city/country]* *[insert telephone/fax numbers, including country and city codes]* *[indicate e-mail address]*

.....	.....	.....
Authorized Signature	Company Stamp	Date

Form 4.1

FORM OF BID

Bid Closing Date:
Currency: USD

Lot No. (To be specified)
This form must be submitted for each lot

We, the undersigned, offer to perform the Works detailed in and at the rates indicated in accordance with the terms of the Invitation for Bids ("the IFB") under the above reference dated … .

The total price of our Bid, **excluding** any discounts as detailed below is the sum of: [*currency and amount in figures*] [*currency and amount in words*]

The discounts offered and the methodology(s) for their application are: [*currency and amount in figures*] [*currency and amount in words*]

The total price of our Bid **inclusive** of the discounts: [*currency and amount in figures*] [*currency and amount in words*]

The total bid price must be stated in words and figures and if there is any contradiction the price expressed in words will take precedence.

The total bid price quoted must be inclusive of tax elements as per the Instructions to Bidders, Bid Pricing.

Any resultant Contract will be subject to the Contract Conditions referred to in the IFB specified therein.

We [name of Bidder] agree and accept that it is a condition of this competitive bidding exercise and a mandatory bid requirement,

Performance and Completion of the Works shall take place within the period stated below;

The Works would commence on_____days from signature of Contract by the parties and the Works would be completed by_____days/weeks/months after the Start Date of the works.

We confirm that the Works to be performed shall fully comply with the technical requirements detailed in the IFB.

We have paid, or will pay the following commissions, gratuities, or fees with respect to the bidding process or execution of the Contract.

Name of Recipient	Address	Reason	Amount
_____	_____	_____	_____
_____	_____	_____	_____

This Bid is valid for acceptance for 90 days from "Bid Closing" date.
We confirm that the person(s) who have signed this document have the necessary authority to do so and their signature will be regarded for the Bidding and for contracting of the Project, all in our name and on our behalf.

……	……..	……..
Authorized Signature	Name in Capitals	Position

Company Name and Address:
Company Registration Number:
Company VAT Number:
Telephone Number:
Facsimile Number: E-

Form 4.2
Bi**dder's Reference:**
Bidder's Name:
Lot No. (A, B, C or D: please specify):

BILL OF QUANTITIES

REFER TO ATTACHMENT 3

Note:
1. Total Bid Price must match the Bid Price in Form 4.1. Form of Bid
2. Unit Price

……	**……**	**……**
Authorized Signature	Company Stamp	Date

Form 4.4

BID SECURITY FORM

Not applicable

FORM 4.5

Bidder's Name:

FINACIAL DATA

Type of Financial information in	**Historic information for previous *3 years,***		
	[Specify Year 1]	*[Specify Year 2]*	*[Specify Year 3]*
Statement of Financial Position (Information from Balance Sheet)			
Total Assets (TA)			
Total Liabilities (TL)			
Total Equity/Net Worth (NW)			
Current Assets (CA)			
Current Liabilities (CL)			
Working Capital (WC)			
Information from Income Statement			
Total Revenue (TR)			
Revenue from solar energy			
Profits Before Taxes (PBT)			
Cash Flow Information			
Cash Flow from Operating Activities			

……	……	……
Authorized Signature	Company Stamp	Date

FORM 4.6

Bidder's Name

LIST OF ON-GOING/COMMITTED PROJECTS

Identify contracts that demonstrate continuous solar photovoltaic energy work Starting January 2015. List contracts chronologically, according to their commencement (starting) dates.

Starting Year	Ending Year	Contract Identification	Role of Applicant
[indicate year]	[indicate year]	Contract name: [insert full name] Solar station size (kW): Contract amount(US$): Type: BOO/BOT/Other AEP for each year (MWh): Award date: Completion date: Brief Description of the Works performed by the Applicant: [describe works performed briefly] Amount of contract: [insert amount in US$] Name of Employer: [indicate full name] Address: [indicate street/number/town or city/country] Contact Person Name & Details: [name, phone, email]	[insert "Prime Contractor" or "JV Member" or "Sub-contractor" or "Management Contractor"] [insert one or more of "solar PV station development", "Solar PV station construction", "solar PV station O&M", "solar PV station owner"]

[indicate year]	[indicate year]	Contract name: [insert full name] Solar station size (kW): Contract amount(US$): Type: BOO/BOT/Other AEP for each year (MWh): Award date: Completion date: Brief Description of the Works performed by the Applicant: [describe works performed briefly] Amount of contract: [insert amount in US$] Name of Employer: [indicate full name] Address: [indicate street/number/town or city/country] Contact Person Name & Details: [name, phone, email]	[insert "Prime Contractor" or "JV Member" or "Sub-contractor" or "Management Contractor"] [insert one or more of "solar PV station development", "Solar PV station construction", "solar PV station O&M", "solar PV station owner"]

.....	.....	.....
Authorized Signature	Company Stamp	Date

Form 4.7

Bidder's Name
Lot No. (A, B, C or D: please specify): this Form must be submitted for each lot.

WORK SCHEDULE

Month / Work	1	2	3	Remark

Note: 1) The above form shall be used to show the supply of the Goods and installation time schedule in a bar chart format.
2) All the works shall be completed within 3 months.
3) A detailed breakdown of the above schedule may be required to be presented during Bid clarification.
4) add rows, if necessary.

.....	.....	.....
Authorized Signature	Company Stamp	Date

Form 4.8
Bidder's Name:
Lot No. (A, B, C or D: Please specify): this Form must be submitted for each lot.

METHOD AND DESIGN STATEMENT

The Bidder shall submit a narrative outlining his intended methods for undertaking the Works that conforms with Section 3, Technical Requirements. This narrative should include, but not be limited to, details of the following:
The proposed methodology and design section should include the following minimum information. Please also refer to the Detailed Scopes of Works at Section 3.1.

a. The methods to be used in procuring the necessary materials, equipment, their transportation to the Site and their installation;
b. For each major element of work, the needed materials, labour and construction equipment including how those will be managed.
c. Explanation of System description;
d. Explanation of Background of selection of key equipment
e. Explanation of Layout of installation;
f. Explanation of Layout of equipment (including single line diagram);
g. Explanation of Structural and mounting details for support system;
h. Specifications of equipment components and subsystems (for example, protection, earthing, etc.);
i. Integration of solar PV system with other power sources such as private diesel generator, or generator subscription.
j. Electrical interconnection requirements related to net metering application;
k. Sensor (pyranometer), monitoring, data logging;
l. Software simulation report of each typical site
m. Training contents, duration, and schedule
n. Health and safety covering: Public safety, labour and staff safety, Health,
o. Risk assessment and any mitigation

.....	.....	.....
Authorized Signature	Company Stamp	Date

Form 4.9
B**idder's Name:**
Lot No. (A, B, C or D: please specify): this Form must be submitted for each lot.

PROPOSED ASSIGNMENT SCHEDULE OF KEY SUPERVISORY STAFF

Bidders are requested to fill in the table below in the form of a Bar Chart to show assignment of key supervisory staff

the month Personnel	1	2	3	Remark

-add rows, if necessary.

.....	.....	.....
Authorized Signature	Company Stamp	Date

Form 4.10

Bidder's name:

FORM OF CURRICULUM VITAE OF PROPOSED KEY SUPERVISORY STAFF

Bidder shall provide the information for every key supervisory staff.

1. Full name :
2. Proposed position :
3. Age :
4. Authorized qualification :
5. Years of working experience :
6. Experience

Project Name (Country)	Working period	Career experience	
		Responsibility	Position

Note: Bidder shall use the form for each key staff member.
Add rows, if necessary.

.....	.....	.....
Authorized Signature	Company Stamp	Date

Form 4.11

Bidder's Name:
Lot No. (A, B, C or D: please specify): this Form must be submitted for each lot.

LIST OF MAJOR CONSTRUCTION EQUIPMENT TO BE MOBILIZED

No.	Equipment	Capacity and Type	Quantity	Own or Lease
1	(example) crane			

Note: If necessary, Bidder shall add other equipment to be mobilized.

.....	.....	.....
Authorized Signature	Company Stamp	Date

Form 4.12

Bidder's name:

FORM OF LIST OF PROPOSED SUBCONTRACTORS

1. Name and status:
2. Address:
3. Name of firm's representative:
4. Establishment date:
5. Fully paid-up capital
6. Experience of the subcontractor in proposed subletting works:
7. Registration in the Republic of Lebanon:
8. Number of technical staff by category:
9. previous and current experiences in the Solar PV Market since 2015 in Lebanon:
10. Attachment: Subcontractor's Authorization Form Shall be attached.

……	……	……
Authorized Signature	Company Stamp	Date

Form 4.13

Bidder's name:
Lot No. (A, B, C or D: Please specify): this Form must be submitted for each lot.

PROPOSED SITE ORGANIZATION

1. Site organization chart:

2. Narrative description of site organization chart:

3. Description of relationship between head office and site (Indicate clearly which responsibility and what authority will be delegated to site management):

.....	.....	.....
Authorized Signature	Company Stamp	Date

Form 4.14 Technical Specifications Statement Sheet

Refer To Attachment 4

Form 4.15

Bidder's name
Lot No. (A, B, C or D: Please specify): this Form must be submitted for each lot.

SCHEDULE OF GOODS

Item	Description	Manufacturer	Model No.	Quantity	Remarks
1	PV module				
2	Solar Inverter				
3	PV array				
4					
5					

<u>All items offered must be BRAND NEW.</u>

.....	.....	.....
Authorized Signature	Company Stamp	Date

Form 4.16 Guarantee Letter for performance ratio
Bidder's Name:
Lot No. (A,B,C or D: please specify): this form must be submitted for each lot

Guarantee Letter

I the undersigned …….…… in my capacity of …… duly authorized to sign for and on behalf of ....., hereby confirm that, within the tender for the appointment of a contractor for the "Design, Supply, and Installation of Solar PV Systems for Schools in Lebanon", our proposal has an Installed Capacity of minimum .....
(kWp) for the total schools under the above mentioned lot.

I the …… under signed guarantee the Electricity produced, installed capacity, and PR as stated below.

Corresponding units:

Therefore, we guarantee the Performance Ratio (PR)

The PR of the installed PV power plant will be measured during commissioning over a period of seven (7) consecutive days. If a power outage happens for any reason, the days of the power outage are excluded and the duration of the PR Test shall be extended to reach the minimum period of 7 days of measurement.
The PR will be calculated according to the following rules:

$$PR_{commissioning} = \frac{E_{produced\ system\ energy}}{GTI * A_{total\ module\ area} * \eta_{STC\ module}}$$

Corresponding units:

		[kWh]
Eproduced system energy	Electricity produced by the PV power plant 1)	
GTI	Global Tilted Irradiation 2)	[kWh/
m^2] A total module area	Total area of PV modules	[m^2]
ηSTC module	Efficiency of the PV module	[%] according to PV module datasheet

1) Produced system energy will be measured during the Test period of seven (7) consecutive days at the connection point.

2) Collected by the tilted pyranometer of a local meteorological measurement station for the Test period of seven (7) consecutive days.

Table 1: Guaranteed (Contractual) PR minimum requirement

Schools of Lot *(Insert lot reference here)*		
Month	PR Simulated* Average per lot	PR Guaranteed (Contractual) Average per lot
January		
February		
March		
April		
May		
June		
July		
August		
September		
October		
November		
December		
Yearly Average		

* Including AC losses until delivery point

The bidders are requested to use the below climatic data to complete the Table 1.

Table 2: Climatic Data

Month	**Average Daily Global Horizontal Irradiation (Wh/m^2)**				
Zone	**Coastal (Beirut)**	**Coastal (Bayssour)**	**Western Mid-Mountain**	**Inland**	**High Mountain**
January	2387.6	2503.6	2471.8	2522.2	2357.3
February	3195.8	3208.1	3165.9	3282.2	3153.3
March	4898.1	4777.7	4734.8	4861.2	4718.4
April	6012	6018.3	5991.8	5979.5	5817.1
May	6837	6833.2	6834.1	6837.6	6837.6
June	7192	7209.7	7192.7	7211.3	7211.3
July	7010.4	7024	7032.8	7037.5	7037.5
August	6343.7	6353.2	6337.4	6405.2	6327.6
September	5374.6	5389.1	5362	5466.1	5347.2
October	3873.5	3896.9	3851.8	3828.4	3750.2

November	2757.2	2770.7	2669.5	2765.4	2656.3
December	2273.4	2287.3	2162.4	2241.2	2149.2
Average	4854.6	4864.1	4825.6	4877.6	4788.4

It is recommended to use of Bayssour irradiation data for areas above 200m of altitude in Climatic Zone 1.

Finally, we confirm that the PV modules will be manufactured less than ……..months from the date of signature of the contract.

Form 4.17 Warrantee Form

Bidder's Name:
Lot No.(A,B,C or D: please specify): this form must be submitted for each lot

Warrantee Form

Component	**Full Warranty Period (Years)**
PV Modules (At least 10 years)	
Inverter (At least 5 years)	
Metallic Structure (At least 10 years)	
Full System (At least 1 year)	
Other *(Add as necessary)*	

.....	.....	.....
Authorised Signature	Company Stamp	Date

SECTION 5

CONTRACT FORMS

Note
These forms are to be used for the execution and during the implementation of the Contract and are provided in the bidding documents for information only at the bidding stage.

Form 5.1	FORM OF CONTRACT
Form 5.2	ADVANCE PAYMENT GUARANTEE FORM
Form 5.3	PERFORMANCE GUARANTEE FORM
Form 5.4	COMPLETION OF WORKS CERTIFICATE FORM
Form 5.5	TRAINING COMPLETION CERTIFICATE FORM

Form 5.1

FORM OF CONTRACT

BEIT EL BARAKA

AND

[_____]

CONTRACT FOR DESIGN, SUPPLY, INSTALLATION OF SOLAR PV SYSTEMS FOR SCHOOLS IN LEBANON

CONTRACT FOR WORKS

THIS CONTRACT ("Contract") is entered into this day of_____, 2022, by and between Beit El Baraka ("the Employer") of the one part and (name Contractor) of the other part having its registered office located at (*enter full Contractor address)* ("hereinafter called the Contractor").

WHEREAS

The Employer issued an Invitation for Bids ("IFB") under dated *enter date* to potential Bidders in respect of the performance of works, for the Project for Design, Supply, and Installation of Solar PV Systems for Schools in Lebanon (hereinafter called "the Works") to be supplied for the benefit of the End-User.

The Contractor submitted its Bid dated *enter date* in response to the IFB ("the Bid") [and subsequent Bid clarification dated];

The Employer has accepted the Bid from the Contractor for the performance of the Works and the remedying of defects therein in the sum of [*state currency and Contract Price in words and figures side by side*] (hereinafter called "the Contract Price").

NOW IT IS HEREBY AGREED AS FOLLOWS:

1. In this Contract words and expressions shall have the same meanings as are respectively assigned to them in the Contract Conditions referred to.

2. The following documents shall be deemed to form and be read and construed as an integral part of this Contract. Whenever there is a conflict, the provisions of the Special Conditions shall prevail over those in the General Conditions.

    a. This Form of Contract and the Appendices attached to it
    b. General Conditions of Contract
    c. Technical Specification Book for Works
    d. The Contractor's Bid including
        - Bill of Quantities
        - Schedule of Goods
        - Method Statement
        - Technical Specifications Statement Sheet
        - Guarantee Letter for Performance Ration
        - Warrantee Form
        - Other proposal submitted in the Bids
    e. The bid clarification(s) dated [*enter date(s)]*

3. This Contract shall prevail over all other Contract documents. In the event of any discrepancy or inconsistency within the Contract documents, then the documents shall prevail in the order listed above.

4. Payment will be made in accordance with Clause 28 of the General Conditions of Contract subject to satisfactory completion of the Contractor's contractual obligations as detailed in the Contract.

5. As soon as practically possible, but not more than seven (7) working days following receipt of the Contract, the Contractor shall sign the Contract and return a signed copy to the Employer.

IN WITNESS whereof the parties hereto have caused this Contract to be executed the day and year first above written in accordance with their respective laws.

For and on behalf of the Employer	For and on behalf of the Contractor
Signed by _____	Signed by _____
Duly Authorised	Duly Authorised
Name and Title: _____	Name and Title: _____

Form 5.2

IRREVOCABLE ADVANCE PAYMENT GUARANTEE FORM

TO BE PROVIDED ON BANK LETTER HEADED PAPER

Addressed to the Employer

ADVANCE PAYMENT GUARANTEE

WHEREAS [name and address of Contractor] ("the Contractor") has undertaken in accordance with the terms of the Contract reference dated [enter date] ("the Contract") to provide the Works as detailed in the Contract.

AND WHEREAS the Contract requires the Contractor to provide the Employer with a bank guarantee issued by a bank acceptable to the Employer as security for the advance payment to be paid under the Contract in the sum of [amount of guarantee figures and words] ("the Advance Payment").

In consideration of the Employer making the Advance Payment to the Contractor under the Contract, we [name and address of bank], hereby unconditionally and irrevocably undertake to pay the Employer without objection on our part, any amount or amounts not exceeding in aggregate [amount of guarantee figures and words] from fresh fund account upon the Employer's first written demand including a statement that:

(i) the Contractor is in breach of its obligation(s) under the Contract, because it has failed to repay the advance or has used the advance for a purpose other than towards performance under the contract or;

(ii) the Employer is entitled to terminate the Contract.

We confirm that no waiver, suspension, change or addition to or other modification of the terms of the Contract shall in any way release us from any liability under this guarantee, and we hereby waive any requirement to be given notice of any such waiver, suspension, change, addition, or modification.

This Guarantee shall remain in full force from the date upon which the said advance payment is received by the Contractor

In the event that the Contractor has not completed its obligations under the Contract by the expiry dates detailed in this guarantee, the validity of the guarantee shall be extended upon receipt of the Employer's written request for a further period, not exceeding six months.

All charges relating to this guarantee (inside and outside country of issuance) shall be borne by the applicant under this guarantee

Duly authorized on behalf of the Bank

Form 5.3

TO BE PROVIDED ON BANK HEADED PAPER (if issued in letter format)

Addressed to [Beit El Baraka]

PERFORMANCE GUARANTEE

WHEREAS [name and address of Contractor] ("the Contractor") has undertaken in accordance with the terms of the contract reference dated [enter date] ("the Contract") to supply [description of goods and services].

AND WHEREAS the Contract requires the Contractor to provide [Beit El Baraka] ("Beit El Baraka") with a bank guarantee issued by a bank acceptable from a fresh fund account to Beit El Baraka for the sum of [amount of guarantee figures and words] as security for the satisfactory performance by the Contractor of its obligations under the Contract.

In consideration of Beit El Baraka accepting this guarantee, we [name and address of bank] hereby unconditionally and irrevocably undertake without any objection on our part to pay Beit El Baraka an amount or amounts not exceeding in aggregate [amount of guarantee figures and words] upon Beit El Baraka' first written demand including a statement that:

(i) the Contractor is in breach of its obligation(s) under the Contract and indicating the nature of the breach,

or

(ii) Beit El Baraka is entitled to terminate the Contract

We agree that no waiver, change or addition to or other modification of the terms of the Contract shall in any way release us from any liability under this guarantee, and we hereby waive any requirement for any notice to be given of any such waiver, change, addition or modification.

This guarantee shall remain irrevocable valid and in full effect until the date of the Completion of Works Certificate under the Contract at which point the value of the guarantee shall be reduced to [amount figures and words] representing five (5) % of [enter value] and thereafter the guarantee shall remain valid until the end of the warranty period being twelve (12) months from the date of the Certificate of Completion of Works or [date] whichever is the earlier. In the event that the warranty period has not expired by the aforementioned date, this guarantee shall be extended at Beit El Baraka' request for a further period of up to six months.

All charges relating to this guarantee (inside and outside country of issuance) shall be borne by the applicant under this guarantee

COMPLETION OF WORKS CERTIFICATE FORM

Form 5.4

To: Enter Contractor's Address

From: name Consultant

COMPLETION OF WORKS CERTIFICATE

In accordance with the terms of the Contract under the above reference ("the Contract") it is certified that the obligations of the Contractor in respect of the performance and completion of the Works in accordance with the requirements of the above Contract have been fully discharged.

Namely:

Enter details of scope of Works - consider need for Interim Certificates.

(Confirm the submission of all the necessary documents)

It is further certified that the following documents as listed below have been submitted according to the requirements of the above Contract:

・, each containing

- Actual work schedule;
- Copy of necessary warranties related to each school;
- Goods list to each school;
- Final as-built drawing for each school
- Operation and maintenance manuals including the data sheet, contact information, single line diagram, electrical, mechanical, and civil work information
- Copy of the Training Completion Certificate signed and issued by each school
- Pictures of PV system of each school

・One set of copy of operating and maintenance manuals for the Employer for reference (hard copy)

Authorised Signatory_____
for the Consultant.

Date_____

cc: the Employer
The Employer
Address

Form 5.5

TRAINING COMPLETION CERTIFICATE FORM

Contractor's
Reference:

To: Enter Contractor's Address

From: Enter End- User name

TRAINING COMPLETION CERTIFICATE FORM

In accordance with the terms of the Contract under the above reference ("the Contract") it is certified that the obligations of the Contractor in respect of the training of staff at [name Site(s)] in accordance with the requirements of the Contract have been fully and satisfactorily discharged.

Detail specific training components completed including no of personnel per task as appropriate etc It is further certified that the following documents as listed below have been submitted according to the requirements of the above Contract

- necessary warranties;
- Goods list to each school;
- final as-built drawing to each school;
- operation and maintenance manuals including the data sheet, contact information, single line diagram, electrical, mechanical, and civil work information;

Name and Title of Authorised Signatory:
Signature: _____ (Authorised Signatory for the End-User)

Date_____

cc: Beit El Baraka

ATTACHMENT 1
3.2 DRAWINGS

BEIT EL BARAKA

SUPPLY AND INSTALLATION OF HYBRID PV SYSTEM FOR SCHOOLS

DRAWINGS

GENERAL NOTES

NOTE DESCRIPTION

THE FOLLOWING NOTES SHALL APPLY TO ALL THE ELECTRICAL DRAWING AS APPLICABLE UNLESS OTHERWISE INDICATED OR NOTED

DO NOT SCALE FROM THE LAYOUT DRAWINGS WORK ACCORDING TO ARCHITECTURAL & ELECTRICAL DETAILS UNLESS OTHERWISE AUTHORIZED

THE ELECTRICAL DRAWINGS SHALL BE READ IN CONJUCTION WHITH THE REST OF THE DRAWINGS

ALL DIMENSIONS SHOWN ON DETAILS ARE IN cm UNLESS OTHERWISE INDICATED

EQUIPMENT GROUNDING (EARTH CONTINUITY) CONDUCTORS ARE NOT ON SHOWN ON SINGLE LINE DIAGRAMS THEY SHALL BE IN ACCORDANCE WITH THE SPECIFICATIONS

THE MAXIMUM FILLING RATIO OF ANY CONDUITS SHALL NOT EXCEED 40%, 60% SHALL BE KEPT FREE

THE PERFORMANCE RATIO OF THE SOLAR SYSTEM SHALL NOT BE LESS THAN 80%

THE MAXIMUM DC VOLTAGE DROP FROM SOURCE TO INERTER SHALL NOT EXCEED 3%

THE MAXIMUM AC VOLTAGE DROP FROM SOURCE TO LOAD SHALL NOT EXCEED 5% WHERE 1.5% FROM SOURCE TO INVERTER AND 3.5% FROM INVERTER TO LOAD

IF THE CABLE DISTANCE BETWEEN DRIVE AND PUMP >=150 M, SINUSOIDAL FILTER SHALL BE INSTALLED

LOCATION OF JUNCTION AND PULL BOXES SHALL BE TO THE APPROVAL OF THE ENGINEER

THE CONTRACTOR MAY RUN MORE THAN ONE CIRCUIT IN THE SAME CONDUIT IN WHICH CASE A COMMON EQUIPMENT GROUNDING WIRE MAY BE SHARED

CHANGEOVER SWITCHES, DICONNECTORS SHALL HAVE INDICATORS FOR THEIR POSITIONS.

THE TERMINAL LUGS OF ALL CIRCUIT BREAKERS AND DISCONNECTING SWITCHES SHALL BE PROPERLY SIZED TO ACCOMODATE THEIR CORRESPONDING CONNECTED CABLES AS INDICATED ON THE DRAWINGS. THIS MIGHT NECESSITATE OFF _ STANDARD OVERSIZING

ALL CIRCUIT BREAKERS SHALL HAVE FRAME SIZES EQUAL TO THE TRIP RATING OR NEXT HIGHER STANDARD VALUE UNLESS THE BUSBAR BRACING OF THE CORRESPONDING PANELBOARD IS INDICATED WHICH CASE THE FRAME SIZE OF THE CIRCUIT BREAKERS IN THAT PANELBOARD SHALL BE INCREASED TO PROVIDE AN RMS SYMMETRICAL SHORT CIRCUIT INTERRUPTING RATING EQUAL TO OR GREATER THAN BRACING RATING.

ALL DISCONNECTING MEANS INCLUDING SWITCHES AND CIRCUIT BREAKERS IN ACCORDANCE WITH NEC ARTICLE 690.17.

ALL PV PANELS, MOUNTING STRUCTURE, METALIC EQUIPEMENT, FENCE SHALL BE CONNECTED TO EARTH.

OUTDOOR ENCLOSURES AND EQUIPMENTS SHALL BE IP 65

THE CONTRACTOR SHALL PROVIDE THE CLIENT WITH DETAILED SINGLE LINE DIAGRAMS THAT INCLUDES THE FOLLOWING:

RATINGS ON ALL EQUIPMENT INCLUDING VOLTAGE, AMPERAGE, BREAKER RATINGS, EQUIPMENT ENCLOSURES, BUS RATINGS, AND KVA/KW RATINGS.

ALL WIRES AND CONDUIT SIZES.

DETAILS FOR INTERCONNECTION OF PV ARRAY TO POWER DISTRIBUTION SYSTEM INCLUDING AUTOMATIC TRANSFER SWITCH, ETC. INCLUDING ELECTRICAL CHARACTERISTICS, UTILITY CONNECTIONS, ETC.

SHORT CIRCUIT CALCULATION SHALL BE SUBMITTED USING APPROVED SOFTWARE SUCH ETAP OR EQUIVALENT.

ALL SPD'S SHALL BE EQUIPPED WITH PROTECTION DEVICES WITH TRIP SIGNALS.
THE CIRCUIT BREAKER AT THE AC SPD SO THE BREAKER WILL TRIP UNDER A FAULT CONDITION INSTEAD OF TAKING DOWN THE ENTIRE SYSTEM. MOUNT SPD WITHIN 1M OF LOAD BUS.

NO STEEL CONDUITS TO BE INSTALLED IN CHLORINATION ROOMS DUE TO CORROSION.

LEGEND:

- MONO-crystalline 600 Wp PV panel
- DC Fuse, string protection, 1000VDC,
- Type 1+2 1000VDC SPD
- DC/AC Disconnection Switch
- AC Circuit Breaker
- Solar VFD pump inverter,
- Motorized Change Over Switch
- Output Filter
- Submersible Water pump:
- AC Lines
- DC Lines
- Control line
- PE

Number of Conductors Relating to Exterior Diameters of Conduits									
A	B			C			D		
	20	25	32	20	25	32	20	25	32
1.5	7	7	7	7	7	7	6	7	7
2.5	7	7	7	6	7	7	4	7	7
4	5	7	7	4	7	7	3	6	7
6	4	7	7	3	6	7	0	4	7
10	0	4	7	0	3	6	0	0	4
A: Section of Conductors (mm^2)									
B: Straight Run									
C: Run with One Bend									
D: Run with Two Bends									
Minimum size of conduit is to be 20mm (external diameter), unless otherwise stated.									

GENERAL NOTES

1. CONTRACTOR SHALL SUBMIT SHOP DRAWINGS FOR APPROVAL PRIOR ANY INSTALLATION.

REFERENCE DRAWINGS/DOCUMENTS

REV	DATE	DRAWN	CHECK	APPROVED	DESCRIPTION
00	25.05.2021	CEH	SM	GN	ISSUED FOR TENDER

CLIENT

BEIT EL BBARAKA
Karm el Zaytoun, Cheikh El Ghabi Street,
Beirut-LEBANON

BENEFICIARY

CONSULTANT

GCE sarl
GreenKode Consulting Engineers
Saida-LEBANON

PROJECT

Supply, install of Hybrid PV system for schools

DRAWING TITLE

GENERAL NOTES

DRAWN	CEH	DRAWING NO.	REV.
CHECKED	SM	BB-GN-00	00
REVIEWED	GN	DATE	SHEET	SCALE
APPROVED	GN	25.05.2021		

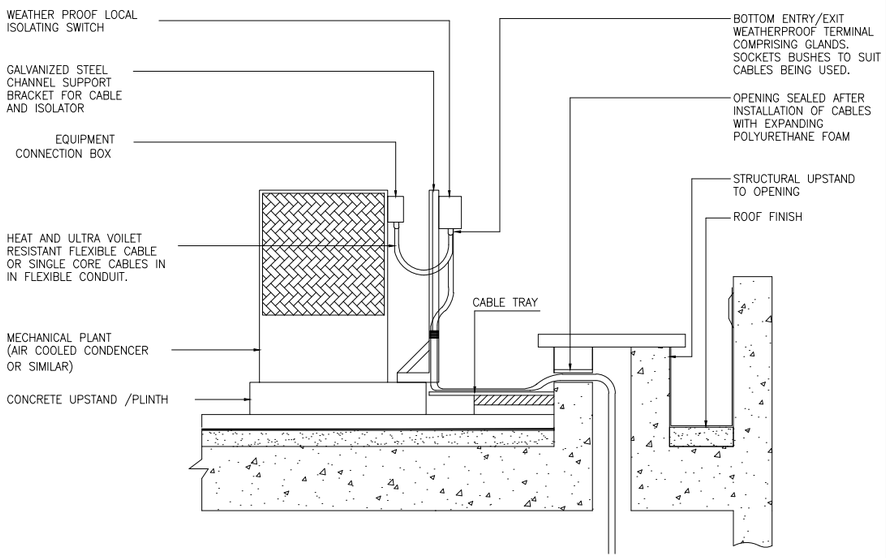

ELECTRICAL SUPPLIES TO ROOF MOUNTED EQUIPMENT

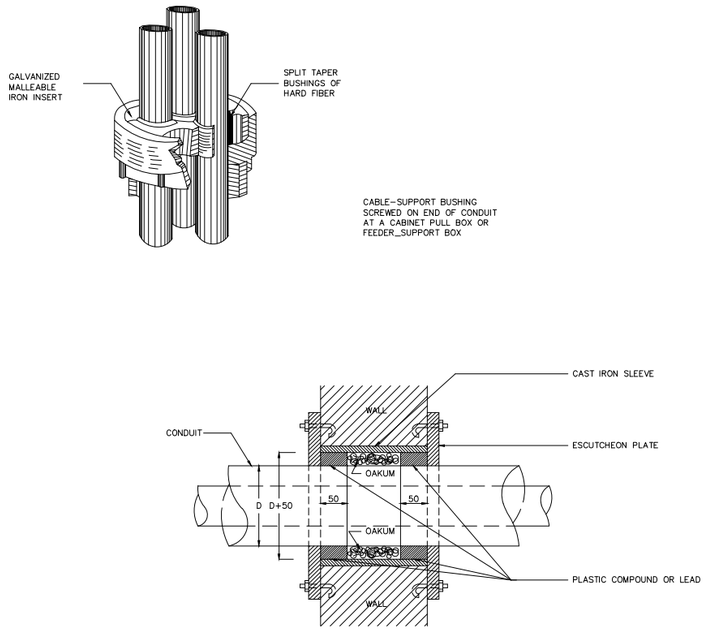

SLEEVE FOR CONDUIT PASSING THROUGH OUTSIDE WALL

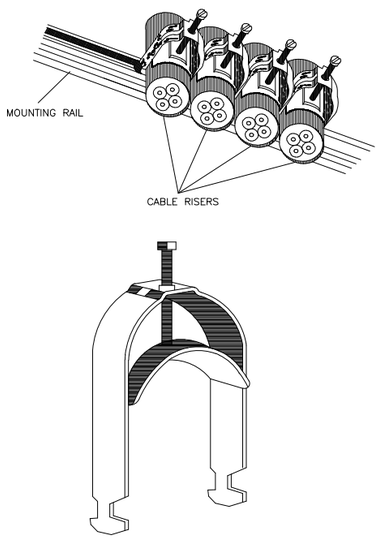

HOT DIP GALVANISED STEEL CLAMP FOR ONE CABLE

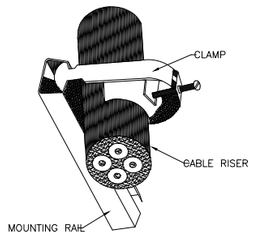

FIXING DETAIL OF CABLE RISER DIAGRAM

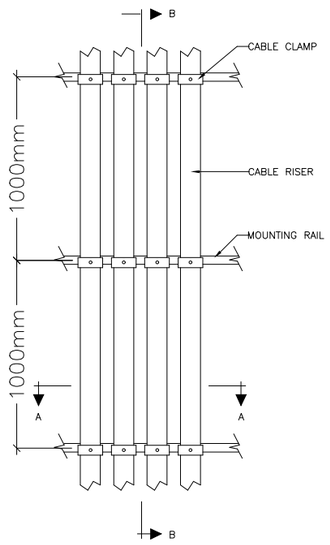

CABLE RISERS

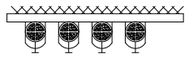

SEC. A–A

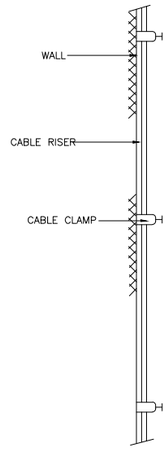

SEC. B–B

CABLE RISER INSTALLATION DETAILS

GENERAL NOTES

1. CONTRACTOR SHALL SUBMIT SHOP DRAWINGS FOR APPROVAL PRIOR ANY INSTALLATION.

REFERENCE DRAWINGS/DOCUMENTS

REV	DATE	DRAWN	CHECK	APPROVED	DESCRIPTION
00	25.05.2021	CEH	SM	GN	ISSUED FOR TENDER

CLIENT

BEIT EL BBARAKA
Karm el Zaytoun, Cheikh El Ghabi Street,
Beirut-LEBANON

BENEFICIARY

CONSULTANT

GCE sarl
GreenKode Consulting Engineers
Saida-LEBANON

PROJECT

Supply, install of Hybrid PV system for schools

DRAWING TITLE

DETAIL 1

DRAWN	CEH	DRAWING NO.		REV.
CHECKED	SM	BB-DT1-00		00
REVIEWED	GN	DATE	SHEET	SCALE
APPROVED	GN	25.05.2021		

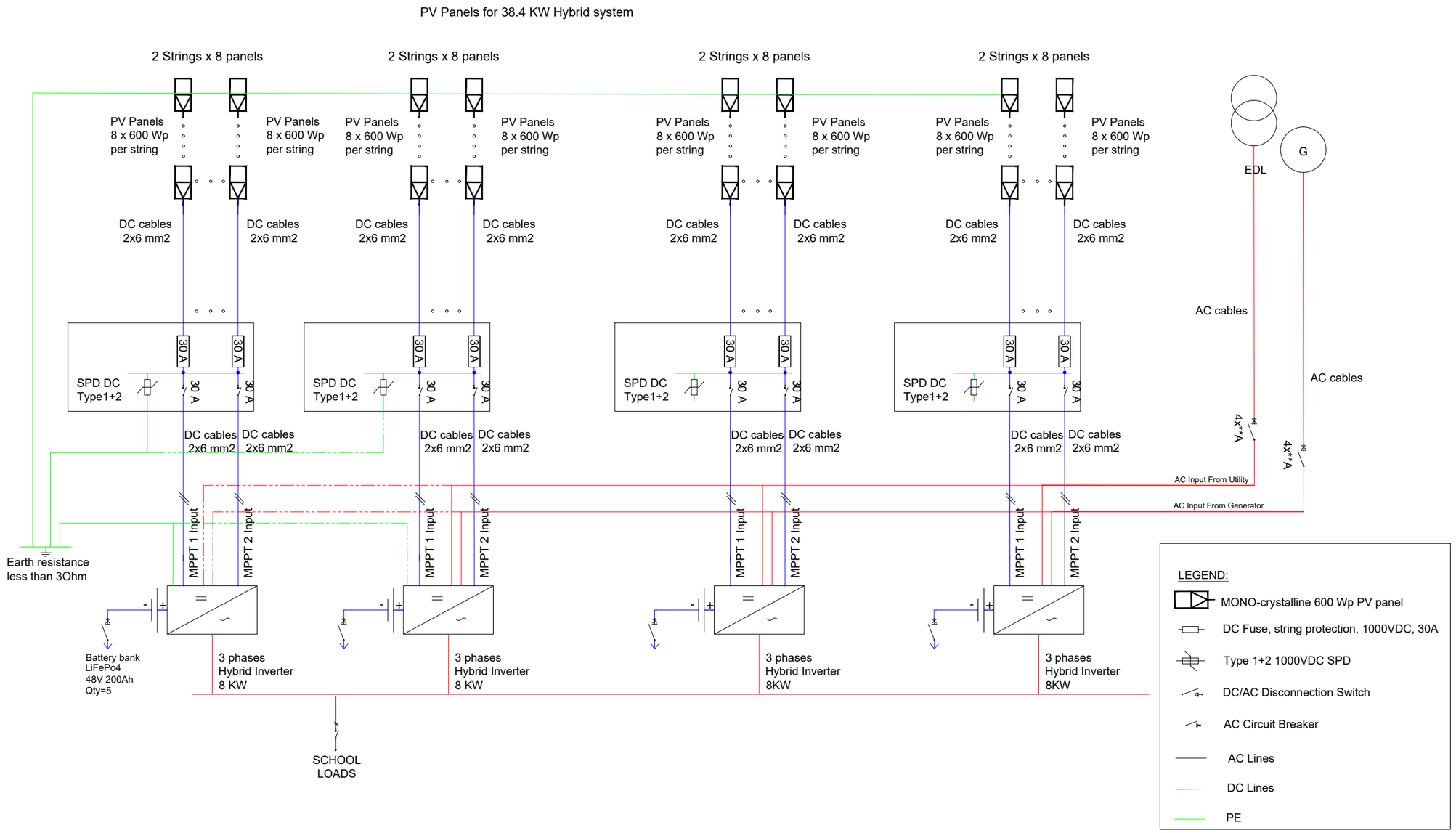

GENERAL NOTES

1. THIS DRAWING IS TO BE READ IN CONJUNCTION WITH PARTICULAR SPECIFICATIONS.
2. THIS IS AN EXAMPLE ONLY. THE SLD IS BASED ON USING PV MODULES OF 600 W.
3. THE BIDDER HAS TO SUBMIT HIS SHOP DRAWINGS BASED ON THE TECHNICAL SPECIFICATIONS OF THE PV MODULES AND INVERTER THE BIDDER PROPOSES TO USE.
4. THE SYSTEM CAPACITY SHALL BE BASED ON LOAD CALCULATION. THE SYSTEM AUTONOMY IS 1 DAY
5. THE MAXIMUM DEPTH OF DISCHARGE IS 80%.
6. ALTITUDE AND TEMPERATURE DE-RATING FACTORS SHALL BE APPLIED
7. EARTH RESISTANCE SHALL BE LESS OR EQUAL TO 3 OHM
8. THE DISTANCE BETWEEN EARTH PIT AND LIGHTNING PIT SHALL BE MORE THAN 10M
9. THE PV PANELS, THE METAL STRUCTURE AND FENCES SHALL BE CONNECTED TO THE GROUND.
10. ALL CABLES SHALL BE IN COVERED CABLE TRAY OR EMT PIPES
11. THE CONTRACTOR SHALL SUBMIT TO THE ENGINEER ALL CALCULATION NOTE AND VERIFY THE SELECTION OF EQUIPMENT'S .

REFERENCE DRAWINGS/DOCUMENTS

REV	DATE	DRAWN	CHECK	APPROVED	DESCRIPTION
00	25.05.2021	CEH	SM	GN	ISSUED FOR TENDER

CLIENT

BEIT EL BBARAKA
Karm el Zaytoun, Cheikh El Ghabi Street,
Beirut-LEBANON

BENEFICIARY

CONSULTANT

GCE sarl
GreenKode Consulting Engineers
Saida-LEBANON

PROJECT

Supply, install of Hybrid PV system for schools

DRAWING TITLE

TYPICAL PV SIZE TS5-38.4 KWp

DRAWN	CEH	DRAWING NO.		REV.
CHECKED	SM	BB-TS5-00		00
REVIEWED	GN	DATE	SHEET	SCALE
APPROVED	GN	25.05.2021		

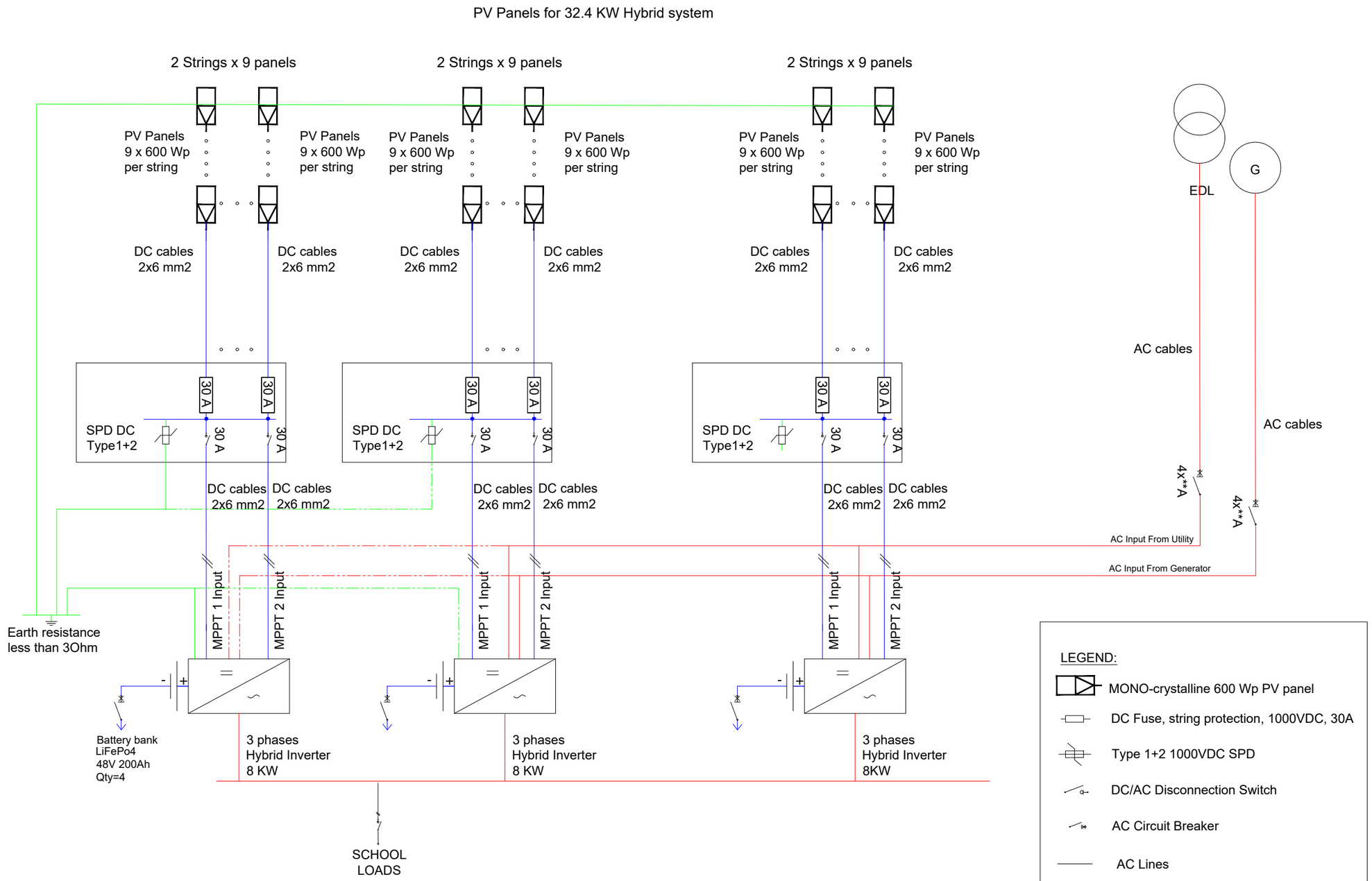

LEGEND:

- MONO-crystalline 600 Wp PV panel
- DC Fuse, string protection, 1000VDC, 30A
- Type 1+2 1000VDC SPD
- DC/AC Disconnection Switch
- AC Circuit Breaker
- AC Lines
- DC Lines
- PE

GENERAL NOTES

1. THIS DRAWING IS TO BE READ IN CONJUNCTION WITH PARTICULAR SPECIFICATIONS.
2. THIS IS AN EXAMPLE ONLY. THE SLD IS BASED ON USING PV MODULES OF 600 W.
3. THE BIDDER HAS TO SUBMIT HIS SHOP DRAWINGS BASED ON THE TECHNICAL SPECIFICATIONS OF THE PV MODULES AND INVERTER THE BIDDER PROPOSES TO USE.
4. THE SYSTEM CAPACITY SHALL BE BASED ON LOAD CALCULATION. THE SYSTEM AUTONOMY IS 1 DAY
5. THE MAXIMUM DEPTH OF DISCHARGE IS 80%.
6. ALTITUDE AND TEMPERATURE DE-RATING FACTORS SHALL BE APPLIED
7. EARTH RESISTANCE SHALL BE LESS OR EQUAL TO 3 OHM
8. THE DISTANCE BETWEEN EARTH PIT AND LIGHTNING PIT SHALL BE MORE THAN 10M
9. THE PV PANELS, THE METAL STRUCTURE AND FENCES SHALL BE CONNECTED TO THE GROUND.
10. ALL CABLES SHALL BE IN COVERED CABLE TRAY OR EMT PIPES
11. THE CONTRACTOR SHALL SUBMIT TO THE ENGINEER ALL CALCULATION NOTE AND VERIFY THE SELECTION OF EQUIPMENT'S .

REFERENCE DRAWINGS/DOCUMENTS

REV	DATE	DRAWN	CHECK	APPROVED	DESCRIPTION
00	25.05.2021	CEH	SM	GN	ISSUED FOR TENDER

CLIENT

BEIT EL BBARAKA
Karm el Zaytoun, Cheikh El Ghabi Street,
Beirut-LEBANON

BENEFICIARY

CONSULTANT

GCE sarl
GreenKode Consulting Engineers
Saida-LEBANON

PROJECT

Supply, install of Hybrid PV system for schools

DRAWING TITLE

TYPICAL PV SIZE TS4-32.4KW

DRAWN	CEH	DRAWING NO.	REV.
CHECKED	SM	BB-TS4-00	00
REVIEWED	GN	DATE / SHEET / SCALE	
APPROVED	GN	25.05.2021	

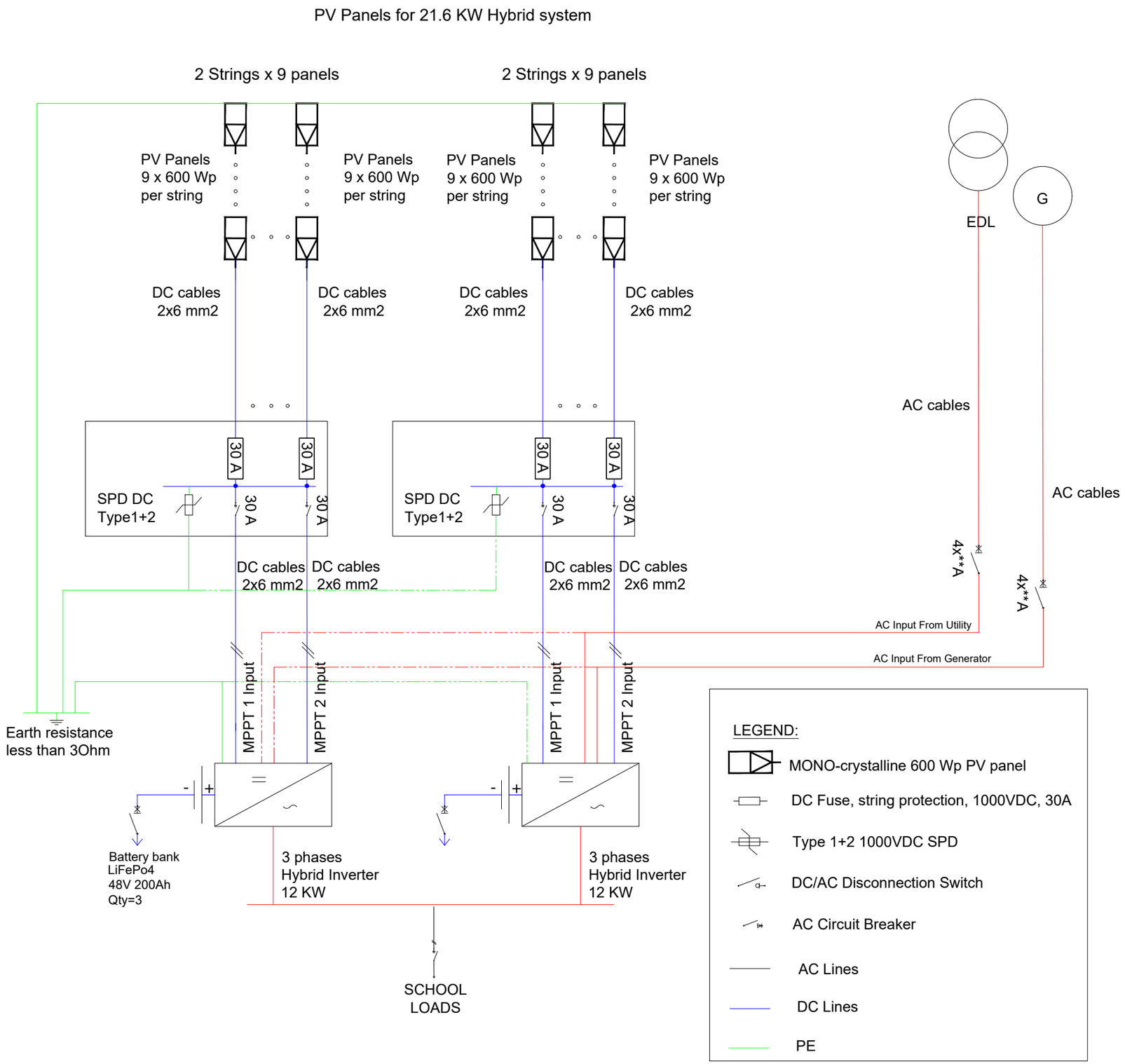

GENERAL NOTES

1. THIS DRAWING IS TO BE READ IN CONJUNCTION WITH PARTICULAR SPECIFICATIONS.
2. THIS IS AN EXAMPLE ONLY. THE SLD IS BASED ON USING PV MODULES OF 600 W.
3. THE BIDDER HAS TO SUBMIT HIS SHOP DRAWINGS BASED ON THE TECHNICAL SPECIFICATIONS OF THE PV MODULES AND INVERTER THE BIDDER PROPOSES TO USE.
4. THE SYSTEM CAPACITY SHALL BE BASED ON LOAD CALCULATION. THE SYSTEM AUTONOMY IS 1 DAY
5. THE MAXIMUM DEPTH OF DISCHARGE IS 80%.
6. ALTITUDE AND TEMPERATURE DE-RATING FACTORS SHALL BE APPLIED
7. EARTH RESISTANCE SHALL BE LESS OR EQUAL TO 3 OHM
8. THE DISTANCE BETWEEN EARTH PIT AND LIGHTNING PIT SHALL BE MORE THAN 10M
9. THE PV PANELS, THE METAL STRUCTURE AND FENCES SHALL BE CONNECTED TO THE GROUND.
10. ALL CABLES SHALL BE IN COVERED CABLE TRAY OR EMT PIPES
11. THE CONTRACTOR SHALL SUBMIT TO THE ENGINEER ALL CALCULATION NOTE AND VERIFY THE SELECTION OF EQUIPMENT'S .

REFERENCE DRAWINGS/DOCUMENTS

REV	DATE	DRAWN	CHECK	APPROVED	DESCRIPTION
00	25.05.2021	CEH	SM	GN	ISSUED FOR TENDER

CLIENT

BEIT EL BBARAKA
Karm el Zaytoun, Cheikh El Ghabi Street,
Beirut-LEBANON

BENEFICIARY

CONSULTANT

GCE sarl
GreenKode Consulting Engineers
Saida-LEBANON

PROJECT

Supply, install of Hybrid PV system for schools

DRAWING TITLE

TYPICAL PV SIZE TS3-21.6KWp

DRAWN	CEH	DRAWING NO.	REV.
CHECKED	SM	BB-TS3-00	00
REVIEWED	GN	DATE	SHEET	SCALE
APPROVED	GN	25.05.2021		

LEGEND:

- MONO-crystalline 600 Wp PV panel
- DC Fuse, string protection, 1000VDC, 30A
- Type 1+2 1000VDC SPD
- DC/AC Disconnection Switch
- AC Circuit Breaker
- AC Lines
- DC Lines
- PE

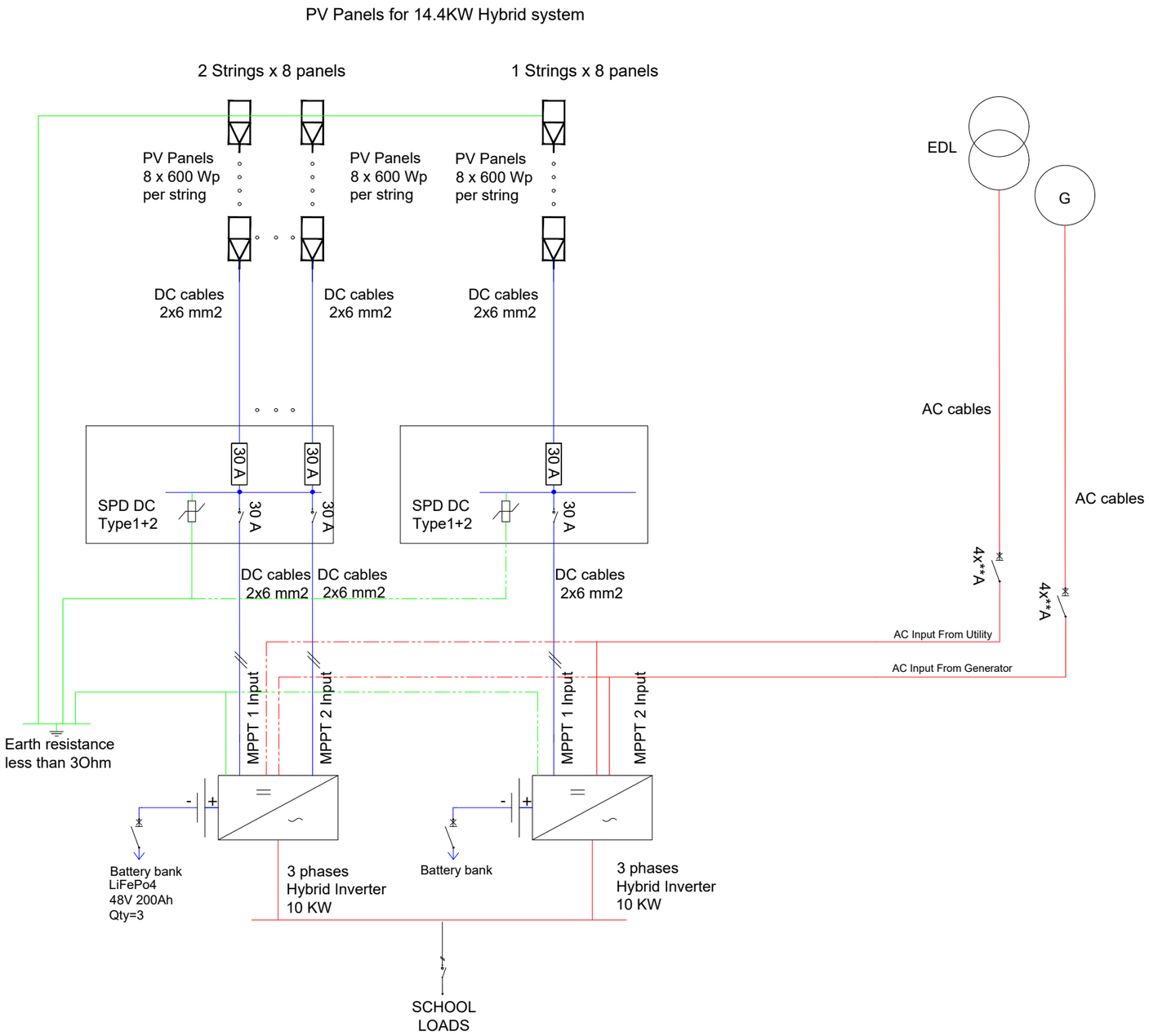

GENERAL NOTES

1. THIS DRAWING IS TO BE READ IN CONJUNCTION WITH PARTICULAR SPECIFICATIONS.
2. THIS IS AN EXAMPLE ONLY. THE SLD IS BASED ON USING PV MODULES OF 600 WP AND VFD INVERTER
3. THE BIDDER HAS TO SUBMIT HIS SHOP DRAWINGS BASED ON THE TECHNICAL SPECIFICATIONS OF THE PV MODULES AND INVERTER THE BIDDER PROPOSES TO USE.
4. THE SYSTEM CAPACITY SHALL BE BASED ON LOAD CALCULATION. THE SYSTEM AUTONOMY IS 1 DAY
5. THE MAXIMUM DEPTH OF DISCHARGE IS 80%.
6. ALTITUDE AND TEMPERATURE DE-RATING FACTORS SHALL BE APPLIED
7. EARTH RESISTANCE SHALL BE LESS OR EQUAL TO 3 OHM
8. THE DISTANCE BETWEEN EARTH PIT AND LIGHTNING PIT SHALL BE MORE THAN 10M
9. THE PV PANELS, THE METAL STRUCTURE AND FENCES SHALL BE CONNECTED TO THE GROUND.
10. ALL CABLES SHALL BE IN COVERED CABLE TRAY OR EMT PIPES
11. THE CONTRACTOR SHALL SUBMIT TO THE ENGINEER ALL CALCULATION NOTE AND VERIFY THE SELECTION OF EQUIPMENT'S .

REFERENCE DRAWINGS/DOCUMENTS

REV	DATE	DRAWN	CHECK	APPROVED	DESCRIPTION
00	25.05.2021	CEH	SM	GN	ISSUED FOR TENDER

CLIENT

BEIT EL BBARAKA
Karm el Zaytoun, Cheikh El Ghabi Street,
Beirut-LEBANON

BENEFICIARY

CONSULTANT

GCE sarl
GreenKode Consulting Engineers
Saida-LEBANON

PROJECT

Supply, install of Hybrid PV system for schools

DRAWING TITLE

TYPICAL PV SIZE TS2-14.4KWp

DRAWN	CEH	DRAWING NO.		REV.
CHECKED	SM	BB-TS2-00		00
REVIEWED	GN	DATE	SHEET	SCALE
APPROVED	GN	25.05.2021		

LEGEND:

- MONO-crystalline 600 Wp PV panel
- DC Fuse, string protection, 1000VDC, 30A
- Type 1+2 1000VDC SPD
- DC/AC Disconnection Switch
- AC Circuit Breaker
- AC Lines
- DC Lines
- PE

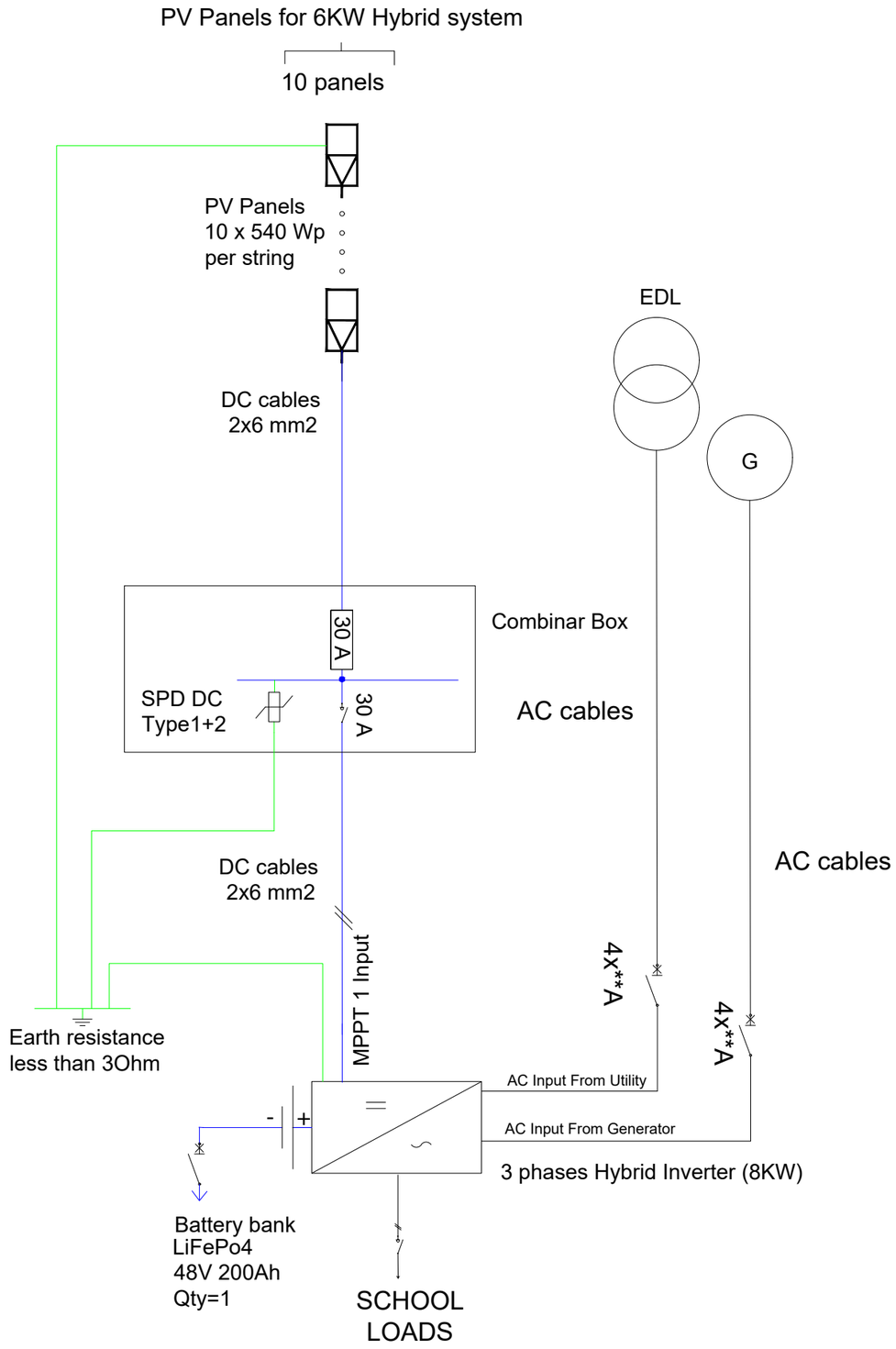

GENERAL NOTES

1. THIS DRAWING IS TO BE READ IN CONJUNCTION WITH PARTICULAR SPECIFICATIONS.
2. THIS IS AN EXAMPLE ONLY. THE SLD IS BASED ON USING PV MODULES OF 600 W.
3. THE BIDDER HAS TO SUBMIT HIS SHOP DRAWINGS BASED ON THE TECHNICAL SPECIFICATIONS OF THE PV MODULES AND INVERTER THE BIDDER PROPOSES TO USE.
4. THE SYSTEM CAPACITY SHALL BE BASED ON LOAD CALCULATION. THE SYSTEM AUTONOMY IS 1 DAY
5. THE MAXIMUM DEPTH OF DISCHARGE IS 80%.
6. ALTITUDE AND TEMPERATURE DE-RATING FACTORS SHALL BE APPLIED
7. EARTH RESISTANCE SHALL BE LESS OR EQUAL TO 3 OHM
8. THE DISTANCE BETWEEN EARTH PIT AND LIGHTNING PIT SHALL BE MORE THAN 10M
9. THE PV PANELS, THE METAL STRUCTURE AND FENCES SHALL BE CONNECTED TO THE GROUND.
10. ALL CABLES SHALL BE IN COVERED CABLE TRAY OR EMT PIPES
11. THE CONTRACTOR SHALL SUBMIT TO THE ENGINEER ALL CALCULATION NOTE AND VERIFY THE SELECTION OF EQUIPMENT'S .

REFERENCE DRAWINGS/DOCUMENTS

REV	DATE	DRAWN	CHECK	APPROVED	DESCRIPTION
00	25.05.2021	CEH	SM	GN	ISSUED FOR TENDER

CLIENT

BEIT EL BBARAKA
Karm el Zaytoun, Cheikh El Ghabi Street,
Beirut-LEBANON

BENEFICIARY

CONSULTANT

GCE sarl
GreenKode Consulting Engineers
Saida-LEBANON

PROJECT

Supply, install of Hybrid PV system for schools

DRAWING TITLE

TYPICAL PV SIZE TS1-6KW

DRAWN	CEH	DRAWING NO.	REV.
CHECKED	SM	BB-TS1-00	00
REVIEWED	GN	DATE / SHEET / SCALE	
APPROVED	GN	25.05.2021	

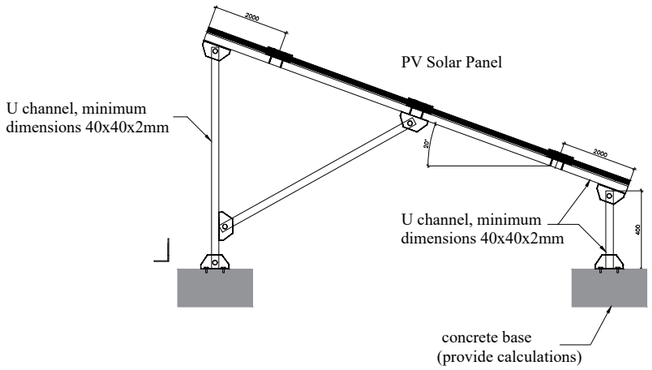

Side View

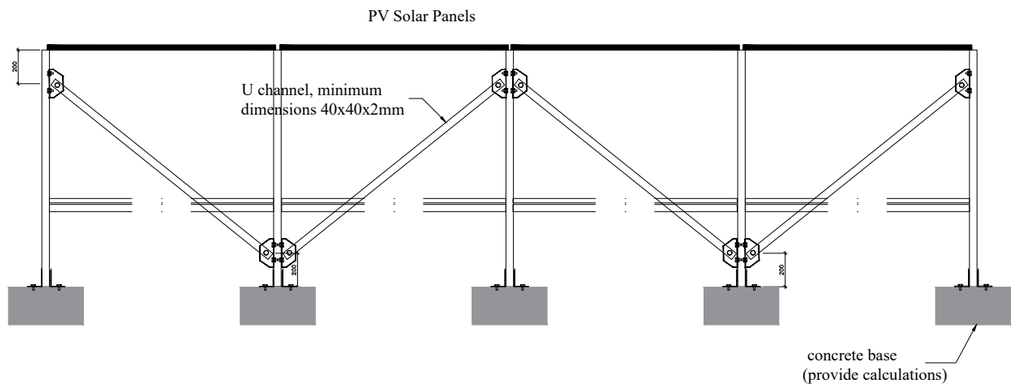

Rear View

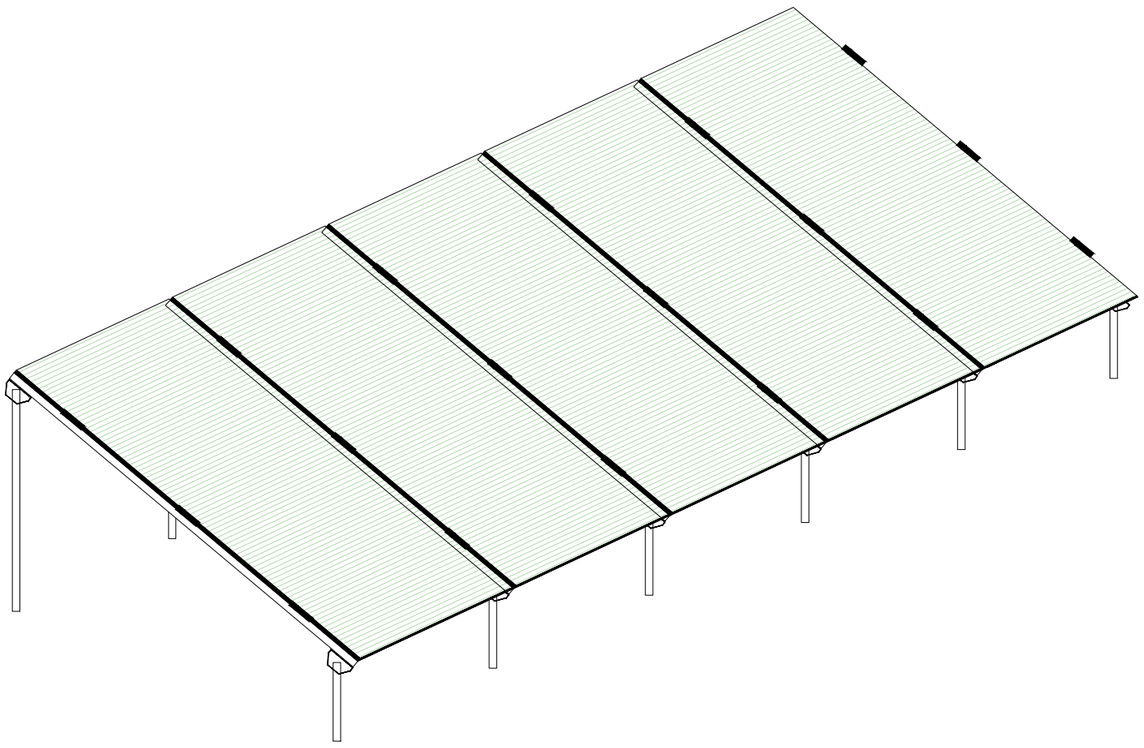

Isometric View

GENERAL NOTES

1. CONTRACTOR SHALL SUBMIT SHOP DRAWINGS FOR APPROVAL PRIOR ANY INSTALLATION.
2. THE CONTRACTOR SHALL SUBMIT CALCULATION NOTE FOR APPROVAL PRIOR TO INSTALLATION
3. SAFETY MEASURES AND PROCEDURES SHALL BE APPLIED AT ALL TIMES DURING ROOF CLEANING & MAINTENANCE.
6. DESIGN LOADS AS PER UBC 1997.
7. THIS DRAWING IS TO BE READ IN CONJUNCTION WITH PARTICULAR SPECIFICATIONS.
8. THIS DRAWING IS TO BE READ IN CONJUNCTION WITH DRAWINGS ZF-G-C-001 & ZF-G-DT-010.
9. CONCRETE MINIMUM ULTIMATE CYLINDER COMPRESSIVE STRENGTHS AT 28 DAYS SHALL BE:
10. F'C =25 MPA FOR FOUNDATIONS, GROUND BEAMS AND SLAB ON GRADE.
11. F'C =15 MPA FOR BLINDING CONCRETE.
12. ALL REINFORCEMENT EXCEPT TIES AND STIRRUPS TO BE OF HIGH TENSILE STEEL HAVING A MINIMUM YIELD STRESS FY= 4200KG/CM2.
13. ALL TIES & STIRRUPS TO BE OF MILD STEEL HAVING A MINIMUM YIELD STRESS FY= 2400KG/CM2.

REFERENCE DRAWINGS/DOCUMENTS

REV	DATE	DRAWN	CHECK	APPROVED	DESCRIPTION
00	25.05.2021	CEH	SM	GN	ISSUED FOR TENDER

CLIENT

BEIT EL BBARAKA
Karm el Zaytoun, Cheikh El Ghabi Street,
Beirut-LEBANON

BENEFICIARY

CONSULTANT

GCE sarl
GreenKode Consulting Engineers
Saida-LEBANON

PROJECT

Supply, install of Hybrid PV system for schools

DRAWING TITLE

DETAIL 4-MOUNTING STRUCTURE

DRAWN	CEH	DRAWING NO.		REV.
CHECKED	SM	BB-DT4-00		00
REVIEWED	GN	DATE	SHEET	SCALE
APPROVED	GN	25.05.2021		

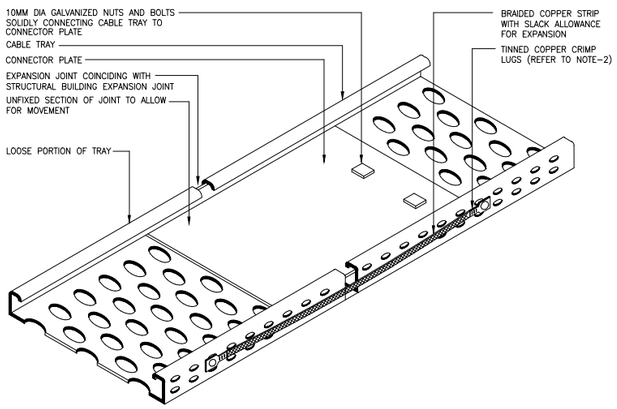

CABLE TRAY CROSSING BUILDING EXPANSION JOINT

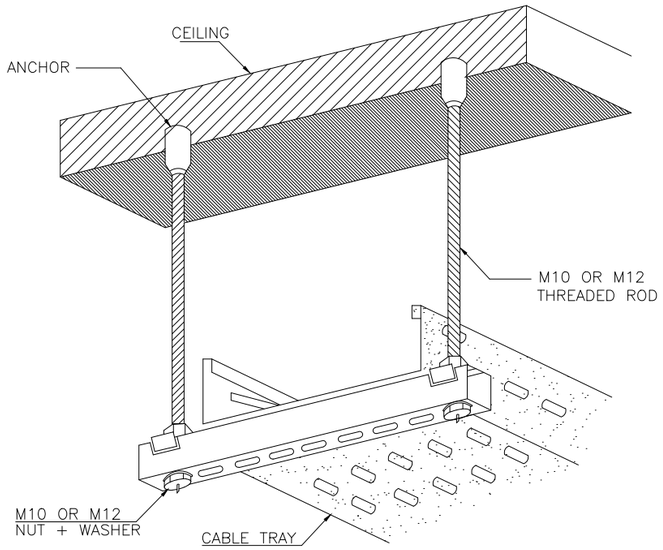

CABLE TRAY CEILING SUPPORT

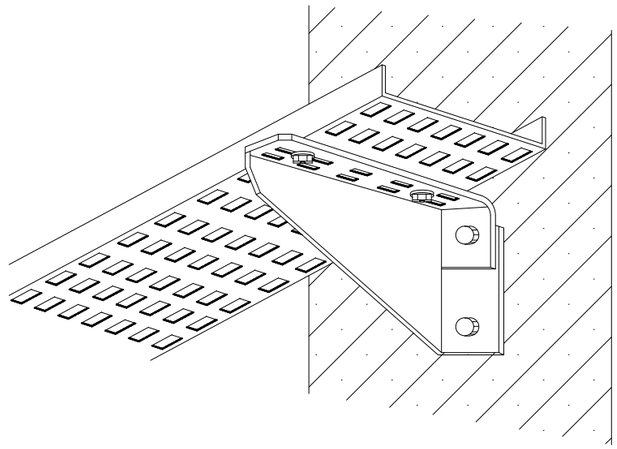

INSTALLATION DETAIL FOR CABLE TRAY SUPPORTED ON THE WALL

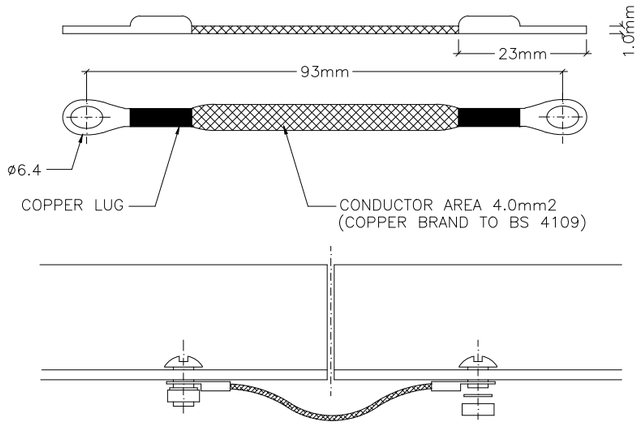

BUTT-JOINTED TRAYS

CABLE TRAY EARTH CONTINUITY CONNECTOR DETAILS

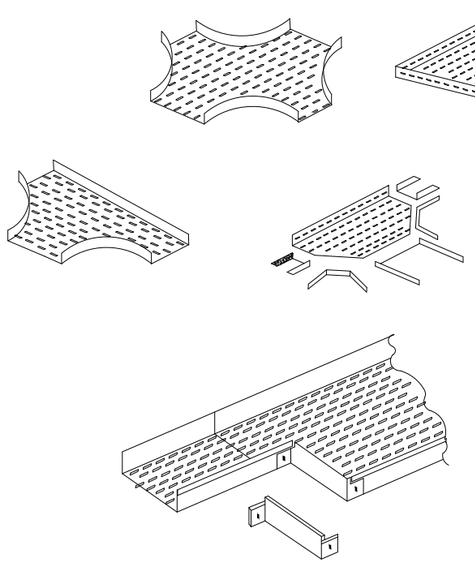

CABLE TRAY REDUCING CONNECTORS

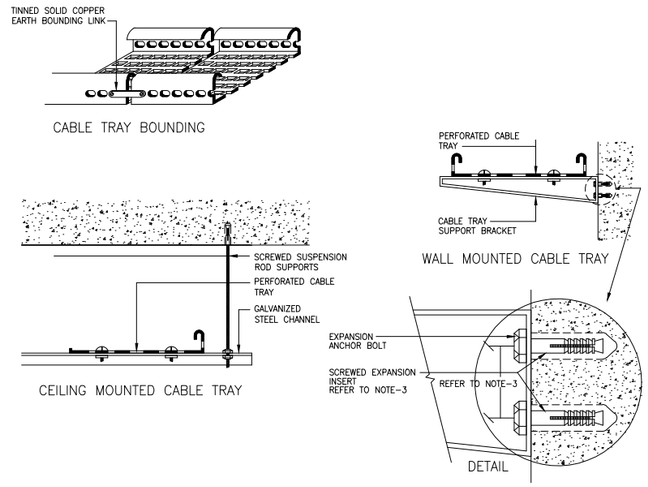

CABLE TRAY INSTALLATION

GENERAL NOTES

1. CONTRACTOR SHALL SUBMIT SHOP DRAWINGS FOR APPROVAL PRIOR ANY INSTALLATION.

REFERENCE DRAWINGS/DOCUMENTS

REV	DATE	DRAWN	CHECK	APPROVED	DESCRIPTION
00	25.05.2021	CEH	SM	GN	ISSUED FOR TENDER

CLIENT

BEIT EL BBARAKA
Karm el Zaytoun, Cheikh El Ghabi Street,
Beirut-LEBANON

BENEFICIARY

CONSULTANT

GCE sarl
GreenKode Consulting Engineers
Saida-LEBANON

PROJECT

Supply, install of Hybrid PV system for schools

DRAWING TITLE

DETAIL 3-CABLE TRAYS

DRAWN	CEH	DRAWING NO.		REV.
CHECKED	SM	BB-DT3-00		00
REVIEWED	GN	DATE	SHEET	SCALE
APPROVED	GN	25.05.2021		

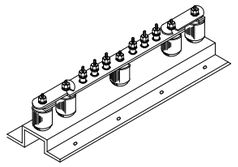

POTENTIAL EQUALIZATION BUS BAR

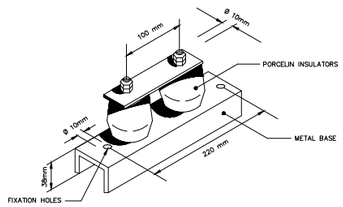

TEST LINK DETAIL

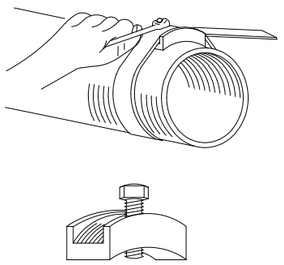

EARTH CONNECTION TO METAL PIPES

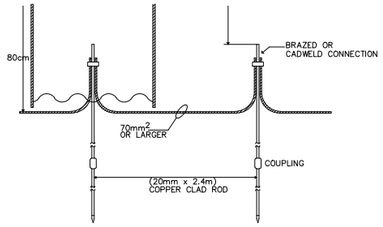

OPTION 1, EARTH RODS

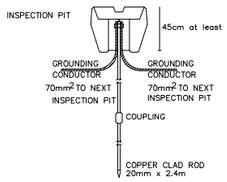

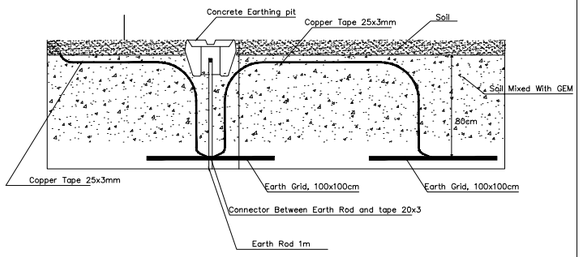

OPTION 2, EARTH GRID (ONLY WHERE SOIL DEPTH IS NOT ENOUGH)

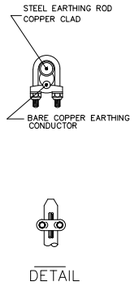

DETAIL

Grounding Protection Detail

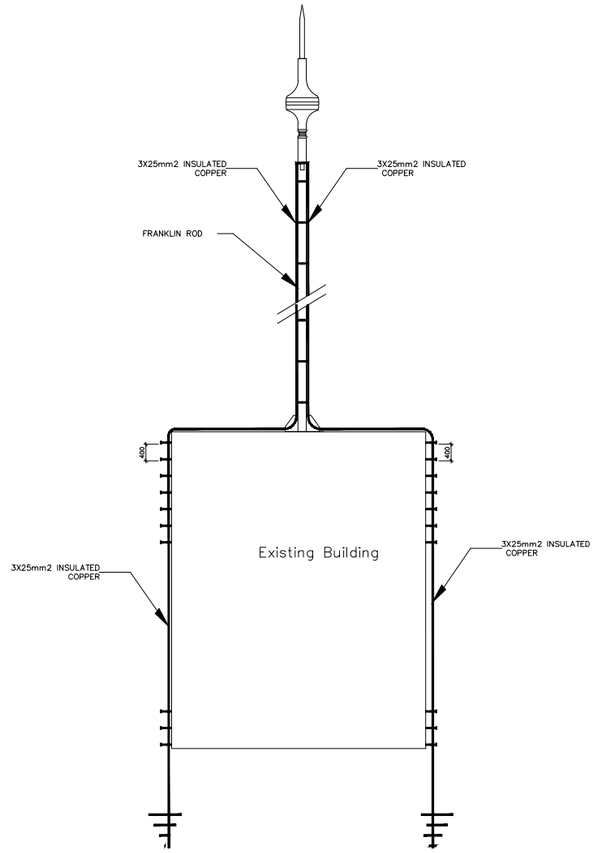

Protection level I,
R=minimum 10% of length beyond the building limit
H= height is three meters higher than the highest object in the roof

Lightning Protection Detail

GENERAL NOTES

1. CONTRACTOR SHALL SUBMIT SHOP DRAWINGS FOR APPROVAL PRIOR ANY INSTALLATION.
2. THE LIGHTENING PROTECTION SHALL BE INSTALLED , THE RADIUS OF COVERAGE SHALL EXCEED THE LIMITS OF FENCE BY 20%.
3. LIGHTENING CALCULATION AND SHOP DRAWINGS SHALL BE SUBMITTED FOR APPROVAL BY THE ENGINEER.
4. LIGHTENING PROTECTION FOR THE ELECTRICAL ROOMS SHALL BE PROVIDED
5. THE EARTH RESISTANCE SHALL BE LESS THAN 5OHM.
6. METAL STRUCTURE SHALL BE CONNECTED TO EARTH

REFERENCE DRAWINGS/DOCUMENTS

REV	DATE	DRAWN	CHECK	APPROVED	DESCRIPTION
00	25.05.2021	CEH	SM	GN	ISSUED FOR TENDER

CLIENT

BEIT EL BBARAKA
Karm el Zaytoun, Cheikh El Ghabi Street,
Beirut-LEBANON

BENEFICIARY

CONSULTANT

GCE sarl
GreenKode Consulting Engineers
Saida-LEBANON

PROJECT

Supply, install of Hybrid PV system for schools

DRAWING TITLE

DETAIL 2-EARTHING AND LIGHTNING PROTECTION

DRAWN	CEH	DRAWING NO.		REV.
CHECKED	SM	BB-DT2-00		00
REVIEWED	GN	DATE	SHEET	SCALE
APPROVED	GN	25.05.2021		

ATTACHMENT 2
3.3 TECHNICAL SPECIFICATIONS

GreenKode Consulting Engineers s.a.r.l.

Section 3.3

TECHNICAL SPECIFICATION BOOK FOR WORKS

Contents

I. General 3
1. Climatic Data and Solar Irradiance 3
II. Scope of Works 3
III. Concept of the PV Plant and Hypothesis 5
IV. Sites Overview 5
V. Constraints 7
VI. SOLAR SYSTEM SPECIFICATIONS 8
A. Civil Works 8
1. Support Structure for PV Array: 8
2. Support Structure Clamps 10
B. Photovoltaic Works 11
1. PV Module 11
C. Solar Inverter 13
D. Batteries 15
E. Cables 17
F. PANELBOARD ENCLOSURES 19
G. DC ISOLATOR/SWITCH 20
H. DC Combiner Box 21
I. Junction Boxes 22
J. PV System Monitoring & Sensors 22
K. Manual Transfer Switch MTS 23
L. Electrical Works 24
1. Conduits and Wire ways 24
2. Flexible Steel Conduits: 25
3. Cable Trays: 25
4. Cable ladder: 26

M. Lightning and Earth System 28
1. Earth Product Specifications: 28
2. Lightning Protection Product Specifications: 29
N. Operation, Testing and Commissioning 32
1. Post Installation Documents 32
2. Operation and Maintenance 32
3. Testing and Commissioning 34
O. Guarantee & Warranty 34
P. Operation and Maintenance 34
1. GENERAL 34
2. SUMMARY 35
3. QUALITY ASSURANCE 35
4. SPECIAL CONTRACT CONDITION OF DEFECT LIABILITY PERIOD 36
Q. SPARE COMPONENTS 36
R. INSTRUCTIONS AND TRAINING FOR THE EMPLOYER'S PERSONNEL 36

I. General

1. Climatic Data and Solar Irradiance

In order to be able to conduct a fair comparison among the different potential bids, all bidders are asked to use the following irradiance table in all their calculations and designs. The source of the table here below is the Climatic Zoning for Buildings in Lebanon- (2005) developed by the United Nations Development Programme (UNDP) and the Ministry of Public Works and Transportation- General Directorate of Urban Planning.

Month	Average Daily Global Horizontal Irradiation (Wh/m²)				
Zone	Coastal (Beirut)	Coastal (Bayssour)	Western Mid-Mountain	Inland	High Mountain
January	2387.6	2503.6	2471.8	2522.2	2357.3
February	3195.8	3208.1	3165.9	3282.2	3153.3
March	4898.1	4777.7	4734.8	4861.2	4718.4
April	6012	6018.3	5991.8	5979.5	5817.1
May	6837	6833.2	6834.1	6837.6	6837.6
June	7192	7209.7	7192.7	7211.3	7211.3
July	7010.4	7024	7032.8	7037.5	7037.5
August	6343.7	6353.2	6337.4	6405.2	6327.6
September	5374.6	5389.1	5362	5466.1	5347.2
October	3873.5	3896.9	3851.8	3828.4	3750.2
November	2757.2	2770.7	2669.5	2765.4	2656.3
December	2273.4	2287.3	2162.4	2241.2	2149.2
Average	4854.6	4864.1	4825.6	4877.6	4788.4

It is recommended to use of Bayssour irradiation data for areas above 200m of altitude in Climatic Zone 1.

II. Scope of Works

The Contractor(s) shall design, supply and install as per the requirements of the RFP and Technical Specifications 43 On-Off grid Hybrid solar photovoltaic in 43 schools distributed all over Lebanon. Each system consists of PV System, metallic structure, inverters, data loggers, Batteries and Balance of System (BOS) components

The provision of training and documentation on the operation and maintenance of the installed plants.

The Contractor shall be responsible for all aspects of the solar PV system including but not limited to, resource assessment, development, design, building, Testing and commissioning.

The Contractor shall be responsible for any necessary civil works if needed, all necessary connections to the existing facilities.

The Contractor shall design and install the circuit, circuit protection, meters, and other equipment while taking into account current and projected load data, voltage, ampacity, short-circuit requirements and

others. The Contractor shall be responsible for the entire infrastructure required to deliver energy into the required load in each facility.

The Contractor must supply spare PV modules to each school, rounded up to the nearest integer as per BOQ.

The Contractor will be responsible for providing the necessary studies and works in order to deliver the optimal design and construction of the 43 solar photovoltaic (PV) systems including:

- Site preparation (structural reinforcement if needed, relocation of existing electro-mechanical equipment, etc.)
- Additional studies required, including study of the roof structure, design and study of support structures, study of the re-routing of electro-mechanical equipment if needed etc.
- Civil works required for the implementation of the photovoltaic plant, including trenches and gateways for cables
- Supply and installation of support structures for photovoltaic modules
- Supply, installation, and connection of photovoltaic (PV) modules
- Supply and installation of elements required to secure modules on the structures
- Supply, installation, and connection of parallel strings of PV modules to junction boxes (PJB), including protection devices (fuses, SPDs, circuit breakers, earthing are required in case of transient over voltage, short circuit, and earth faults)
- Supply and installation of electrical connections between the elements of the system, including the electrical conduits for cable routing.
- Supply, installation, and connection of On-Off grid Hybrid inverters for connection to the electrical network capable of providing reactive power, including DC and AC protections
- Supply, installation and connection of data loggers and auxiliary equipment.
- Supply, installation of Lithium Batteries as specified wall mounted or Rack Mounted depend on Site condition and Approval of Consultant/Employer.
- Supply, installation, and connection of the electrical panels of AC circuit (terminal box for inverters, Main Switch Board), including protection devices (such as SPDs as necessary)
- Supply and installation of technical equipment: measuring devices, power supply, lighting, high and low ventilation (it is preferable to have a well naturally ventilated inverters room), fire extinguisher, safety displays, cabling, etc.
- Supply, installation, and connection of a basic user-friendly remote monitoring systems that sends data to the manufacturer portal (accessible through internet)
- The protection of the generators against reverse power
- Connection of the power generation at the delivery point including a standard energy meter
- The supply and installation of equipotential bonding devices and earthing of all metal parts of the plant
- The supply of relevant protection for the solar installation such as SPD
- The reduction of the visual impact of the plant
- Transport of all equipment to the site, on-site temporary storage and security, exchange in case of breakage
- Supply of all documents and information necessary for any licenses or agreements

- Testing and commissioning of the system
- Submission of necessary documentation
- Provision of the operation and maintenance training

III. Concept of the PV Plant and Hypothesis

- The bidder should deliver the optimal design of PV system to each mentioned school.
- Shadowing of the PV modules from trees, buildings or any other obstacles should be minimized over the whole day and there shall be no shadows in a period of ± 4h w.r.t. solar noon.
- Total Power of the PV System in a Typical Site/School should be minimum 6 kWp for TS1, 14.4 kWp for TS2, 21.6 kWp for TS3, 32.4 kWp for TS4 and 38.4 KWp accounting for the negative power tolerance.
- The guaranteed performance ratio should be at least 80% in each site.

IV. Sites Overview

- Given the variation in load profiles among schools, the required PV system sizes are grouped into Five (5) typical sites as per Table 1 below. Based on the assigned capacities and geographical distribution of schools, schools were grouped into 4 lots: A, B, C, and D, as shown in the tables below.
- It is the responsibility of the bidder to identify the type of connection in each school (single-phase or three-phase) from site visits.

GreenKode Consulting Engineers s.a.r.l.

LOT A

Code	School	Location	Link
F006	6-Ecole St Maroun Des Pères Antonins Hadath	Baabda	https://goo.gl/maps/4Dsa6bKJasyzzhLA7
F015	15-Collège des Soeurs du Rosaire Abdin	dekwaneh	https://goo.gl/maps/xmnMSmsjKNbUVJkY9
F065	65-FC-Saint Vincent De Paul Broumana	Broummana	https://goo.gl/maps/Lxhppx8j8iXnHQcr7
F067	67-Sainte Famille Maronite - Notre Dame de la Délivrance - Zalka	Zalka	https://goo.gl/maps/KQKeTE6N2bqU3ac98
F102	102-Archevêché Maronite D'Antélias-Collège Saint Georges Zalka	Zalka	https://goo.gl/maps/2dKGehJvVQW2bZYJ9
F026	26-FC Saint Vincent De Paul Clémenceau	Climenceau Beirut	https://goo.gl/maps/YLHKCEV5YALQJYEa8
F073	73-Soeurs De La Charité De Besançon Baskinta	Beirut	https://goo.gl/maps/M8wqTAjvuWTKQM5s7
F064	64-Ecole des frères Maristes - Champville-Dik El Mehdi	Mazreaet Yachoua	https://goo.gl/maps/aWceTm8exDZv7QKSA
F075	75-Collège Des Soeurs Du Rosaire Mountazah	Mansouriyyeh	https://goo.gl/maps/3Rd1CXSYDRSfnayN7
F078	78-Notre Dame du Mont Carmel Fanar	Fanar	https://goo.gl/maps/PMyb8s3c9Rv4NkW87
F081	81-Collège De La Sainte Famille Francaise Fanar	Fanar	https://goo.gl/maps/QHQgehsy48ipimyD6
F086	86-Mekhitarist School	Sad El Bouchriyeh	https://goo.gl/maps/y5ZaQuyxF6MWXBo67

LOT B

Code	School	Location	Link
F032	32-FC - Rmaile	Rmaile	https://goo.gl/maps/Ro5U5MRnV5HxZTR96
F034	34-Collège Mar Abda-Deir El Qamar	Deir El Qamar	https://goo.gl/maps/KDonEzkJhKep9DHo8
F035	35-Ecole St Joseph De L'Apparition-Deir El Qamar	Deir El Qamar	https://goo.gl/maps/HeMaqNvySAxHnaVeA
F036	36-Ecole El Marj-Chouf Baaklin	Baaklin	https://goo.gl/maps/YJtAL7CAeaCcNiEi6
F061	61-Marjeyoun National College	Marj Aayoun	https://goo.gl/maps/x4TZM1DJUxxzwQzY8
F096	96-SSCC Machghara	Machghara	https://goo.gl/maps/1PyjZ23XcPqEMqVF9
F088	88-Collège Des Soeurs Du Rosaire-Maamrieh / Saida	Saida	https://goo.gl/maps/XHjFd6kQi5zYQWGc6
F029	29-Ecole Notre Dame Du Liban Des Soeurs Antonines Rmeich	Rmeich	https://goo.gl/maps/NahfpEKWUGePzxv88
F033	33-SSCC Damour	Damour	https://goo.gl/maps/U28HuGfXu3kLVaDE9
F087	87-Collège Notre Dame Des Soeurs Antonines Nabatiyeh	Nabatiyeh	https://goo.gl/maps/x2XUETi6VfwKzBas9
F030	30-SSCC - Ecole Saint Joseph Ain Ebel	Ain ebel	https://goo.gl/maps/EB4tKga6c7SHqxm79

F037	37-Ecole Saint Charbel Jiyeh	Jiyeh	https://goo.gl/maps/BQeq7vQ4YhUcgzMs6
F043	43-Collège Notre Dame De Machmouché	Jezzine	https://goo.gl/maps/EbFkxjCkgWje7hmx7

LOT C

Code	School	Location	Link
F106	106-Ecole Al Moutran Barsa	Barsa, Tripoli	https://goo.gl/maps/SaPsHr5GkgArAxu49
F109	109-Ecole Al Moutran Daher El Ain	Tripoli	https://goo.gl/maps/rg8YmK6VLV7MJJAK6
F112	112-Ecole Al Moutran Zaytoun	Barsa, Tripoli	https://goo.gl/maps/3kTWHNHdFSW2fAxw8
F001	1-FC Ecole Notre Dame De La Paix Kobayat	Koubayat, Tripoly	https://goo.gl/maps/8X7zMDx4hQnWLNmt8
F108	108-Ecole Al Moutran Chekka	Chekka	https://goo.gl/maps/NKm37m25JwdhuY9k9
F113	113-Ecole Al Moutran Al Menye	Minye	https://goo.gl/maps/FyvVsRDR2vWmsBsp8
150	89-01-Collège National Orthodoxe – Kobbe	Tripoli	34.43537195265639, 35.84989564721605
F097	97-North Lebanon College (Al Kalima School - St. Anthony)	Zgharta	https://goo.gl/maps/NgpftbJGmUes7r6P7

LOT D

Code	School	Location	Link
F041	41-Collège De L'Ange Gardien - Blat	Jbeil	https://goo.gl/maps/RLEA1RmazF8GzgYWA
F039	39-Institut Filles De Marie Auxiliatrice De Don Bosco Kartaba	Kartaba	https://goo.gl/maps/Zc45QdvbFhSv3u6y9
F046	46-FC-Zouk Mikeal Affaires Sociales Vierge Puissante	zouk mikael	https://goo.gl/maps/NLTgyyccgUXTnwML7
F063	63-SSCC Mrouj	Mrouj	https://goo.gl/maps/hxMoEVwKAp36KTb47
F066	66-Saint Georges Khenchara	Khenshara	https://goo.gl/maps/8SSuTeczRmW969zRA
F084	84-SSCC Kharroube	Bikfaya	https://goo.gl/maps/PNfJPqcSVEHmG2B17
F047	47-FC-Sainte Louise Ajaltoun	Ajaltoun	https://goo.gl/maps/Ak36sjdKFfFJU2MEA
F009	9-SSCC Fakiha Ras Baalbeck	Fakiha	https://goo.gl/maps/PoeAuuGa5GorSzhC9
F042	42-Collège Des Soeurs Du Rosaire Jbeil	Jbeil	https://goo.gl/maps/moWioECXeNiSiWMs5
F050	50-Collège Saint Roch Mrah El Mir Kleiat	Ajaltoun	https://g.page/SRSLebanon?share

V. Constraints

The main constraints on site are:

- Works to have a minimal impact on the waterproofing level of the roofs. Any impact, direct or indirect, should be remediated.
- The design and weight of the metallic structure to be optimized.

- Relocation of electro-mechanical equipment might be required.
- Corrosive environment in certain locations

The plant must be designed considering the safety during construction and operation of the plant, especially:

- Safety of workers
- Safety for users
- Safety for the equipment of the plant
- Safety for existing structures and systems

VI. SOLAR SYSTEM SPECIFICATIONS

This section describes the technical requirements of the main components, equipment, and design of the plant. Bidders will have to specify and justify that their offer meets these criteria. Any change in the offer with respect to these criteria must be reported and justified.

A. Civil Works

1. Support Structure for PV Array:

a) Product Specifications:

(1) Mounting Structure:

- The support structure material shall be made of hot-dip galvanized steel/aluminum mounting structure with all needed elevation and accessories (aluminum clamps, screws, nuts, etc...
- The structure should be fixed to concrete foundations withstanding minimum wind speeds of 140 km/hr or higher as required by the AASCE 7.05 code. The structure itself needs to be properly coated and protected against environmental factors such as rain, humidity, and other conditions. The structure itself has to be fixed on a concrete flat base under each pillar of minimum thickness 15 cm with a waterproofing membrane including cartonal layer under the concrete same size to avoid damaging water proofing on roof

- The support frame structure should be able to resist at least 25 years of outdoor exposure without suffering significant damage or corrosion.
- Tilt angle shall be facing true south or southeast if the latter option is plausible for aesthetic reasons.
- The elevated structure has to be securely anchored to the supporting surface.
- Concrete foundations of appropriate weight and depth for elevated structures mounted directly on the ground, bolted with anchor bolts of appropriate strength for elevated structures.
- The structures shall be designed for simple mechanical on-site installation. Access for panel cleaning and clearance for maintenance must be available from the top for cleaning and from the bottom for access to the module's junction box.
- The structure to be installed on concrete pads to avoid drilling and damaging the SBS and the steel to be galvanized with minimum 1.5 mm thickness and crossed from the highest elevation. Wind load analysis to be submitted to confirm adequacy.
- On site welding is not permitted, however built-up sections for mounting to be the only acceptable option.

b) Installation Requirement

- Installation works in accordance with approved standards, as per manufacturer's recommendations, and to the satisfaction of the supervision entity at Beit El Baraka.
- The work shall be carried out by qualified and certified personnel in respect with the designs approved by the supervision entity at Beit El Baraka.

c) Submittals

- Full details, catalogues, and product manufacturer datasheet.
- PV Plant mechanical layout
- Civil structure design for a typical section at minimum
- Detailed single line diagram for each system
- Detailed cabling layout including any trenching and conduits and covered cable trays
- Provide the recommended maintenance method for the mounting structure and maintenance checklist sheet.
- Structural design analysis with official report according to the international codes and standards: AASCE, DIN, BS, EN, AISC…
- Shade analysis
- Layout of the Support Structure for PV Array including all the connections, arrangement, tilt angle, strings…
- Official manufacturer certifications must be achieved and submitted: ISO 9001, ISO 14001, OHSAS 18001, TUV, SGS…
- Official manufacturer warranty paper for a minimum period of 10 years (warranty includes all the mounting structure components)

2. Support Structure Clamps

a) Product Specifications

- Clamp material should be aluminum
- Clamps must be Compatible with the PV module that will be used
- The clamp dimensions and thickness should withstand a wind load of 120 km/hr higher as required by the AASCE 7.05 code.

b) Installation Requirement

- Solar modules should be attached to the array structure using clamps.

- When using clamps, the solar panel manufacturer's installation requirements shall be followed. The installer shall consider the following:
  - Amount of overhang allowed from clamp to end of module; and size of clamp required.
  - At least 6 clamps for each module

c) Submittals

- The mounting structure submittal shall include catalogues and product manufacturer datasheets.
- Essential official manufacturer certifications must be achieved and submitted: ISO 9001, ISO 14001, OHSAS 18001, TUV, SGS…
- Official manufacturer warranty paper for minimum duration 10 years (warranty includes all the mounting structure components)

B. Photovoltaic Works

1. PV Module

a) Product Specifications:

The contractor shall be responsible for using high efficiency photovoltaic modules with the following minimum requirement:

- Tier 1 Manufacturer
- Solar Panel Wattage at STC ≥450W
- Poly or Mono-crystalline silicon solar cells
- IP rating: IP65 for junction box and IP67 for connectors.
- Certified MC4 Type
- Module efficiency >20.5%
- Operating temperature -20°C to 70°C
- Integrate bypass diode

- Bidder to demonstrate a minimum of 2 years familiarity with the product
- Positive Power Tolerance
- Higher cell efficiency with 4 Bus bars.
- Maximum load 5400 Pa
- Official manufacturer PV module certifications must be achieved for the following o IEC:60891-2, IEC:60904, IEC:61215-2, IEC:61345-1, IEC:61701-2, IEC:61730, IEC:61829-1, IEC:618353-1, IEC:62257-7 and EN:50380
- Official manufacturer must be achieved standard certifications: ISO 9001, ISO 14001.
- Minimum official manufacturer warranty paper for minimum duration 12 years.
- Warranty for power output of at least 95% for the first 5 years after commissioning date, at least 93.1% for the 5-15 years after commissioning date, at least 85% for the 15 to 25 years after commissioning date with 0.54% degradation per year.

b) Installation Requirement

Installation works must be done in accordance with approved standards, as per manufacturer's recommendations, and to the satisfaction of the supervision entity at Beit El Baraka. Where multiple parallel PV strings exist, there may be a requirement to install overcurrent protection (e.g. string fusing). Contractor should provide a site specific full system design including all shading issues, orientation and tilt, along with the system's site-specific energy yield, including average daily performance estimate on kWh for each month of solar generation.

- Contractor should ensure array configuration is compatible with the inverter specification
- Contractor should ensure all equipment is fit for purpose and correctly rated

- The Contractor shall be responsible for all off loading and handling of module on site and shall ensure that module is delivered to site on drums properly protected against mechanical damage.
- The Contractor shall be responsible for open circuit voltage test on each PV string and on the total array.

c) Submittals

The Contractor must submit for approval:

- Full details, catalogues and manufacturer data.
- Data sheet of PV module that contains I-V Curves, all electrical and mechanical Data, Dimensions, Module area, Weight…etc
- Electrical wiring diagram showing the detailed PV strings, connections, exact routing of PV modules, also the electrical schematic diagram that includes the electrical ratings of: Modules, The PV array, DC & AC isolators, Overcurrent devices (ie. fuses, circuit breakers, etc)
- Essential official manufacturer must be achieved standard certifications: ISO 9001, ISO 14001.
- Provide the following electrical wiring diagrams:
  - Diagram showing the number of modules in series in a string
  - Diagram showing the number of strings in parallel in PV array
  - Diagram showing the PV array tilt
  - Diagram showing the PV array orientation.
- Provide the recommended maintenance for the system (provide maintenance checklist sheet)

C. Solar Inverter

a) Product Specifications:

The proposed solar inverter must meet the following requirement:

- Required Country of origin: North American countries, European Union countries, Scandinavia, U. K, Switzerland, R. O .C, South Korea, Japan or Australia, Thailand.
- Dual power input with DC solar priority and AC power support.
- Hybrid Grid Tie (On grid/Off grid) Solar inverter
- Compatibility with the submitted batteries (Bidder to provide a certificate of compatibility of the proposed inverter with respect to the proposed battery, and if the latter is not possible, the bidder to submit a proof that the mentioned 2 items had been previously installed and are working properly)
- Pure sine wave output
- Bidder to demonstrate a minimum of 2 years familiarity with the product
- With embedded two MPPT Trackers.
- Support two different AC input, First for Grid and second for Generator with capability of Remote start in case of Low Battery
- The Time of Switching to the battery source in case of Grid Failure do not exceed 4ms.
- LCD display and LED indicator
- Inverter supporting real time information PV production, output AC demand, feed-in, through a communication module/software via Bluetooth or USB (possibility to link to internet/server for remotely reading info) or any other communication standard.
- 5 years product warranty

b) Installation Requirement

- Complete with configuration accessories, wiring (with earth connection) and installation.
- Installation works in accordance with approved standards, as per manufacturer's recommendations, and to the satisfaction of the supervision entity at Beit El Baraka.

- At both the proposal and design stages, it is important to consider the proposed location of inverters, in relation to the main switchboard or sub-board where the inverter AC output is to be connected. Location where the inverter is proposed to be installed must be well ventilated.

c) Submittals

- Full details, catalogues and product manufacturer datasheet.
- Essential official manufacturer certifications must be achieved and submitted: EN-61000-6-1, EN-61000-6-3, IEC62109-1, IEC62109-2, IEEE1547, RULE21,AS4777 and UL 1741.
- Essential official manufacturer must be achieved standard certifications: ISO 9001, ISO 14001.
- Official manufacturer warranty paper for minimum duration of 5 years.

D. Batteries

a) Product Specification

- Country of origin: North American countries, European Union countries, Scandinavia, U. K, Switzerland, R. O .C ,South Korea, Japan or Australia, Thailand.
- Lithium batteries to be quoted
- The proposed Battery must comply with the latest IEC type tests.
- The Proposed Battery must be approved by The Hybrid inverter manufacturer for the BMS communication.
- Bidder to demonstrate a minimum of 2 years familiarity with the product
- 6000 cycles at 80 % DoD minimum for Lithium
- Low internal resistance
- Wide operating temperature range (-20 C to + 60 C)
- Long battery life
- 2 Days of System Autonomy

- Designed for frequent cyclic discharge (prove ability to fully discharge in C10)
- Bidder to specify discharge rate
- Min 10 years warranty
- Lithium batteries should have battery Controller in real time to control the charge and discharge each cell of the battery, the controller will protect the battery against full discharge by disconnecting the load when DOD reaches 90 %
- Certificates: DIN (technical performance), IEC 62040- EN 62619 and ISO 9001:2000 and, UN38.3/UL 1642 or UL 1973/CEI-021

b) Installation Requirement

- Complete with Battery Rack and installations, or Wall Mounted Boxes.
- Should be closed type cabinets to use for placing batteries in an efficient manner
- Battery rack should be smooth finishing standards and is available in suitable sizes as per the system requirement
- Ventilation fans (24Vdc/48Vdc) must be connected to the battery bank to be operated by an external controller to ensure that they operate even when the inverter is switched off
- The clearance of place floor and ceiling of the first shelve should not be less than 20cm or as required
- Installation works in accordance with approved standards, as per manufacturer's recommendations, and to the satisfaction of the supervision entity at Beit El Baraka.
- At both the proposal and design stages, it is important to consider the proposed location

c) Submittals

- Full details, catalogues and product manufacturer datasheet.

- Essential official manufacturer certifications must be achieved and submitted: List of IEC type tests to be provided
- Essential official manufacturer must be achieved standard certifications: ISO 9001, ISO 14001.
- Official manufacturer warranty paper for minimum duration of 4 years

E. Cables

a) Product Specifications:

- Cables must be of type FG21M21 insulated flexible conductor core
- Connectors must be compatible with the proposed PV module (no cut of PV cable).
- Compatible with system rated AC and DC current and voltage.
- Certified by UL4703/ UL854 / TÜV.
- Wires jacket shall be flame retardant, halogen free, e-beam cross linked, water proof, UV-resistant
- Wires must be fixed on cable trays
- Wires between PV arrays and other system components (inverter, junction box, etc.) must protected by UV PVC tubes or ducts.
- All conductors shall be copper.
- All cable schedules/ layout drawings shall be approved prior to installation.
- Official manufacturer certifications must be achieved and submitted for the following: TUV, ROHS, CE, class 5, IEC 60228, IEC 60364
- Official manufacturer warranty paper for minimum duration 10 years on material and manufacturer.
- AC cables must be multipolar with double insulation (Class II).
- Identification of cables inverter output and inputs
- Protective device against transients suitable for photovoltaic systems where appropriate. Using relevant SPD with fault signal and thermal disconnection.

b) Installation Requirement

The contractor must submit detailed shop drawings for approval. Sizes of cables between array interconnections, array to junction boxes, junction boxes to inverter etc. is selected carefully to keep the voltage drop of the entire solar system to the minimum.

- The maximum allowed AC Voltage drop between Inverter and Pump is 4.5%
- The maximum allowed DC Voltage drop is 3% in all stations where distance below 200m Installation works in accordance with approved standards, as per manufacturer's recommendations, and to the satisfaction of the supervision entity at Beit El Baraka.
- The Contractor must ensure that all DC cables specified are rated to handle the PV array maximum voltage.
- For cables installed near, or in contact with PV modules, the operating temperature should be considered to be equal to 80°C.
- Cable routing / marking: All cable/wires are to be routed in pipes and suitably tagged and marked with proper manner so that the cable easily identified and not subject to damage.
- When installing plugs to the ends of wires, it must use heat shrink tubes instead of commercial tape. Excellent resistance to heat, cold, water, oil, abrasion.
- The ratings given are approximate. The supplier must indicate size and length as per system design requirement.

c) Submittals

- Full details, catalogues and product manufacturer datasheet & wiring diagram.
- Shop drawings showing exact wire routing, size, ...

- Size of conductors in conduits, details of supports, details of connection, etc.
- List of feeders & sub-feeders with their sizes, route length, voltage drops, etc.

F. PANELBOARD ENCLOSURES

a) Product Specifications:

- Brand manufacturer must be one of the worldwide renowned manufacturers
- To be manufactured and imported from North American countries, European Union countries, Scandinavia, United Kingdom, Switzerland, Japan or Australia only.
- Type: General purpose type, suitable for relevant ambient conditions, flush or surface mounted as shown on the drawings, comprising box, trim, or trim and door to approved manufacturer's standards and sizes.
- Construction: Box, trim and doors where required, shall be Electro-galvanized sheet steel of gauges not less than specified and in accordance with the standards: base plate 3mm, front door panel 2mm, sides and back 1.5mm. Welded joints shall be galvanized after manufacture. Gutter spaces shall conform to the standards, adequate for the utilized cables/wires subject to the Engineers' approval and in no case less than 200 mm on all sides. Enclosure shall have pre-designed angles or threaded end studs to support and adjust mounting of interior panel board assembly.
- Trims shall cover and overlap front shield, covering all terminals and bus compartments, to form a dead front panel. Trims shall be fixed to cabinet/box by quarter-turn clamps engaging flange of box (use of screws engaging holes in flange of box is not acceptable). Screws where used shall be oval-head, countersunk and flush. Trims for flush mounted panel boards shall overlap box and front shields by at least 20 mm. Trims for surface mounted panel boards shall be exactly sized to form flush fit to box.

- Doors shall have concealed hinges integral with trim, and flush combination cylinder lock and catch. Locks shall be keyed alike.
- Finish: Inner and outer surfaces of cabinet/boxes, trims, doors etc. Shall be cleaned, phosphatized, chrome passivated and treated with final thermosetting epoxy powder modified by polyester resins providing high resistance to mechanical injury, heat, acid and alkali solvents, grease, aging and corrosion and of standard gray color to the approval of Engineer.
- Directories under glassine, or an approved alternative durable arrangement, shall be provided on inside face of doors, or in metal label holders when trim without doors are specified. Directories shall be typed to identify panel boards and clearly indicate circuit number and description of load.
- Enclosures shall be heavy duty sheet steel cabinets, suitable for mechanical impact resistance of IK10 to IEC 62262, fully weatherproofed (IP 54), without knockouts, but with removable sealed/gasketed bottom gland plates and gasketed doors.

b) Installation Requirement

- Installation works in accordance with approved standards, as per manufacturer's recommendations, and to the satisfaction of the supervision entity at Beit El Baraka.

c) Submittals

- Full details, catalogues and product manufacturer datasheet & wiring diagram.

G. DC ISOLATOR/SWITCH

a) Product Specifications:

- Each "leg" of the DC isolator (positive or negative conductor) must be rated to break the full PV array maximum voltage.

- DC isolators shall also be adequately rated to break the full load current, or potential fault currents from the array.
- Switching OFF Lock

b) Installation Requirement

Installation works in accordance with approved standards, as per manufacturer's recommendations, and to the satisfaction of the supervision entity at Beit El Baraka.

- Isolators shall not be fixed on any portion of the panel.
- Isolators shall be labeled "PV ARRAY DC ISOLATOR".
- Isolators shall be rated for DC use.

c) Submittals

- Full details, catalogues and product manufacturer datasheet & wiring diagram.

H. DC Combiner Box

a) Product Specifications:

The Contractor shall be responsible for the supply and installation of DC combiner boxes (DCB) that comply with the following specifications:

- Class II boxes suitable for outdoor use (minimum IP65 protection if implemented outdoor, in accordance with DIN 40050 and IEC 529)
- Includes suitable DC fuses on each (+) and (-) polarities.
- Includes Protective devices against surge overvoltage suitable for photovoltaic systems. Using Type I plus II SPD (Surge Protective Devices) with fault signal
- Overvoltage protection devices to comply with IEC 61643-11.
- Includes DC disconnect switch for load breaking
- Physical separation of positive and negative terminal blocks

I. Junction Boxes

The Contractor shall be responsible for the supply and installation of junction boxes (JB) that comply with the following specifications:

- Class II boxes suitable for outdoor use (minimum IP65 protection if implemented outdoor, in accordance with DIN 40050 and IEC 529)
- Physical separation of positive and negative terminals blocks

J. PV System Monitoring & Sensors

a) Product Specifications:

- Supply, installation and commissioning of online monitoring and control system with all necessary sensors and accessories
- The plant monitoring parameters shall include:
  - PV array energy production: Digital Energy Meters to log the actual value of AC/ DC Voltage, Current & Energy generated by the PV system shall have to be provided.
  - Solar Irradiance: An integrating Pyranometer (Class II or better) shall be provided, with the sensor mounted in the plane of the array. Readout shall be integrated with data logging, system.
  - Temperature: Temperature probes for recording the Solar panel temperature and ambient temperature shall be provided.

b) Installation Requirement

- Installation works in accordance with approved standards, as per manufacturer's recommendations, and to the satisfaction of the supervision entity at Beit El Baraka.
- Recording energy generation data to confirm that the system performance is in line with the performance estimate. (DNS meters, which usually only record exported energy, do not provide suitable information for this purpose.)

- Collecting diagnostic data and fault notification from the inverter(s), so that system faults can be rectified as quickly as possible.
- The contractor should provide appropriate information to the installers so that the monitoring system can be installed, configured and tested.
- The following physical requirements should be considered:
  - Network access – wired, wireless or mobile (e.g. passwords, network IDs, etc.),
  - Physical network connection,
  - Power supply requirements for monitoring devices,
  - Physical wiring to sensor devices (e.g. irradiance, wind, temperature, string / panel monitoring).

c) Submittals

- Full details, catalogues and product manufacturer datasheet & wiring diagram.
- Online account (user name & password)

K. Manual Transfer Switch MTS

a) Product Specifications:

- Brand manufacturer must be one of the worldwide renowned manufacturers,
- To be manufactured and imported from North American countries, European Union countries, Scandinavia, United Kingdom, Switzerland, Japan or Australia only,
- The MTS unit shall transfer load in delayed transition (break-before-make) mode,
- Minimum MTS size (amperage rating) shall be as shown on the Drawings. The MTS unit shall be rated for continuous duty based on all load classes,
- MTS unit shall be suitable for installation in an MCC section or in its own enclosure,

- Unless specified otherwise, MTS units shall be 4-pole and suitable for application to 3- phase, 4-wire, 50 Hz, 600 V systems.

b) Installation Requirement

- Installation works in accordance with approved standards, as per manufacturer's recommendations, and to the satisfaction of the supervision entity at Beit El Baraka.

c) Submittals

- Full details, catalogues and product manufacturer datasheet & wiring diagram.

L. Electrical Works

1. Conduits and Wire ways

a) Product Specifications:

- Work is deemed to include:
  - Heavy gauge PVC rigid conduits.
  - Heavy gauge steel conduits and flexible steel conduits.
  - Cable trays and cable ladders.
  - Mounting fitting, fixing, etc.
  - Cutting and jointing, bending, etc.
  - Junction boxes, expansion joints connectors, etc.
  - Components for earth continuity.

- Rigid heavy gauge PVC conduits and fittings:
  - Material is to be of rigid plasticized PVC, high impact, resistant to chemical
  - Corrosion, self-extinguishing. Conduits shall have a compression resistance of 750 N per 5 cm.

- Material shall operate in a temperature range of -10°C to 60°C. Conduits shall be marked at intervals of 1 to 3 meters.
- Inside and outside surfaces of conduits shall be free from burrs, flash and other similar defects.
- Wall thickness of conduits shall be uniform.
- Conduits shall comply with BS 6099-2-2.

- Rigid Heavy Gauge Steel Conduits and Fittings:
  - Conduits and fittings shall be of heavy gauge drawn and welded steel, screwed galvanized and not less than 20 mm external diameter.
  - Conduits shall be free from rust patches or mechanical damage and shall be adequately protected from damage whilst stored on site. All exposed threads, die marks and other abrasions shall be painted with two coats of an approved metallic paint immediately the conduit is installed.
  - Steel conduits and fittings shall comply with BS 4568 part 2.

2. Flexible Steel Conduits:

- Flexible conduits and assemblies are to be made from galvanized steel to BS 731.
- Where exposed to moisture conditions, conduits are to have PVC sheath.

3. Cable Trays:

- Heavy-duty cable trays shall be of the return flange type slotted and perforated. Trays shall be Hot-dip galvanized after perforation protected by two pack epoxy finish, minimum 1mm thick (galvanizing in accordance with BS 729). Trays shall be jointed with flange coupling strops that virtually make the flanges continuous. These shall be secured in place with nuts and bolts.

- All cable tray runs shall be continuous and constructed of bends, tees and other accessories that are purpose made by the manufacturer of cable tray.
- Cable tray shall have adequate mechanical strength for the load to be carried and shall have provision for the addition of a minimum of 40% of the initial installed cable and/or load. The deflection shall not exceed that recommended by the manufacturers.
- All cable trays shall be installed with its covers of the same type and size.
- The cable trays shall have engraving marks of the serial and identification numbers.

4. Cable ladder:

- Cable ladder shall be constructed in mild steel galvanized after perforation and protected with a two pack epoxy finish (galvanizing in accordance with BS729).
- All cable ladders shall have sufficient strength and space allowance to accommodate the future installation of an addition of 40% of the initially installed load.
- Cable ladders shall not be used with greater loading or spans than those recommended by the manufacturers.
- All bends, tees or other accessories shall be purpose made by the manufacturer of the cable ladder.

a) Installation Requirement

- Installation works in accordance with approved standards, as per manufacturer's recommendations, and to the satisfaction of the supervision entity at Beit El Baraka.
- The installation and capacity of the conduits shall be in accordance with the IEE Wiring Regulations.
- The installation shall be neat and tidy.
- Means shall be provided to prevent condensed or entrapped moisture remaining within the conduit system.

- The conduit system, joint boxes, loop boxes etc. shall be firmly supported.
- The system shall be clean and free of sharp edges, burrs etc.
- Due allowance shall be made for expansion and contraction.
- PVC rigid conduit to be formed on site. Prefabricated conduits shall not be accepted.
- Standard circular or looping in boxes shall be installed at intersections. Small circular channel type inspection fittings will not be approved.
- Cables connected to different category circuits shall not be run thru common conduits.
- Conduit shall be installed at least 100 mm clear of, and preferably above, pipes and any other services.
- Under no circumstances shall accessories of one conduit system type be used with another type (e.g. black accessories may not be used with galvanized conduit).
- Not more than two right angle bends shall be allowed in any surface mounted conduit run without provision of an inspection fitting for drawing in purposes between them.
- Surface mounted Conduits shall not be dismantled for wiring, and must be capable of being wired complete without draw wires being installed during erection.
- Sleeves for cable must be filled with a fire retardant compound to prevent fire spread from one compartment to another.
- Conduits specified to run on the surface shall be fixed by means of galvanized distance saddles to allow a 5mm space between the surface and the conduit.
- All sizes of cable trays shall be attached to the building framework at intervals not more than that recommended by the manufacturer.
- Screws and bolts securing trays to brackets and joining trays shall be arranged so as to prevent damage to cables.

- Cutting and modification of straight tray, ladder will not be permitted without prior approval.
- Additional protection of fireproof barriers should be provided where cable trays pass through walls and partitions.
- Cable trays and ladders are to be earthen at maximum spacing of 30m, by a cable of 16mm² section.

b) Submittals

- Manufacturers catalogue with specifications.
- Samples.
- Shop drawings showing the exact routing of conduits, cable trays, boxes and accessories with their types and dimensions.

M. Lightning and Earth System

1. Earth Product Specifications:

Supply and install equipment required to connect to earth all electrical equipment and installations in compliance with the relevant clauses of the IEC Regulations and based on the TT earthing system.

- Work will include without limitation:
  - Earth bars.
  - Test links,
  - Earth conductors
  - Bonding
  - Inspection pits
  - Accessories.
- Installation works in accordance with approved standards, as per manufacturer's recommendations, and to the satisfaction of BEIT EL Baraka.

- The contractor shall be responsible for the installation of proper earth connections, and grounding of all electrical items accessible to personnel including but not limited to:
  - Solar modules frames,
  - Mounting Structure,
  - Inverters,
  - Electrical Cabinets,
  - Cable trays, combiner & junction boxes,
  - Control, Data Monitoring Equipment.
- Earth resistance shall not exceed 2 ohms. Earth resistance shall be tested prior to startup or commissioning activities.
- Resistance to earth of complete system measured at any point not to exceed 3 Ohms.
- Earthing installations shall conform to IEC publications 364-3 and 364-4-41.

2. Lightning Protection Product Specifications:

Supply and install a complete lightning protection system in compliance with the relevant clauses of the IEC Regulations.

- Work will include without limitation:
  - Air Termination Network.
  - Down Conductors
  - Earth Termination Network.
  - Bonding.
  - Inspection pits,
  - Accessories.

- Lightning earth consists of three or more earth pits providing an earth connection point with less than five ohms resistance to the general mass of the earth.
- Earth rods shall not be less than 16 mm diameter pure electrolytic copper molecularly bonded onto a high tensile steel core to a minimum thickness of 0.25 mm.
- Earth link conductors shall be of high conductivity, soft drawn stranded conductor 50mm².

a) Installation Requirement

- All metal works including in the installed system, in the vicinity of the lightning protective system must be bonded to it, to avoid the danger of side flashing.
- All bonds, saddles, clamps, clips, earth bonding points and flexible bonds are to be copper or copper alloy.
- Permanent earthing connections are to be made by exothermic welding process.
- Materials used for earthing are to be copper or approved copper alloys specially manufactured for the purpose. Electrical continuity is to be of durable construction providing an independent fault current return path of low resistance to the site earth.
- Air termination network consist of vertical and horizontal conductors, connected to the reinforcing bars in the number of positions required by the standards.
- Reinforcing bars shall be used as down conductors providing that they are electrically continuous and adequately earthen.
- The array structure of the PV modules shall be grounded properly using adequate numbers of earthing pits. All metal casing/ shielding of the plant

shall be thoroughly grounded to ensure safety of the personal and power plant.

- The system should be provided with adequate earthing points. This includes earthing for lightning, system grounding, separately for DC and AC active points. The frame of the PV module array should be earthed at multiple points.
- Automatic ground fault protection circuits to be installed to monitor any unwanted current flow to the ground and should active to prevent any damage.
- Earth termination network consist of earth rod electrodes connected together via a ring conductor at foundation level and to reinforcing bars.
- Each solar power plant shall be provided with lightning protection. The purpose of which is to protect the Solar PV plant and existing equipment on site from lightning strikes, and overvoltage hazards. The source of over voltage can be lightning, atmosphere disturbance etc.
- Lightning down conductors shall follow most direct path between air terminals and earth pit, avoiding sharp bends and narrow loops. Where necessary, the formation of loops in down conductors shall not violate the code restrictions in terms of the gap formed across the loop.
- Mechanical Protection of Down Conductors: Unless otherwise shown on drawings, provide PVC conduit, starting 0.3 m below earth and to a height of 1.9 m above earth with proper fixing for the conduit. Test link shall be positioned 2 m above earth.
- Inspection (Earth) Pit: Extend 150 mm below top of earth rod. Cover earth rod connector with suitable protective compound, which can be easily removed for inspection. Connector shall not be covered with backfill material and shall remain clean.

b) Submittals

- Full details, catalogues and product manufacturer datasheet.
- Layout diagram for earthing connection and lightning protection.

N. Operation, Testing and Commissioning

1. Post Installation Documents

- Contractor responsible for submitting list of equipment supplied with model, description and serial numbers.
- Contractor responsible for basic system information including system rating and component ratings, commissioning date and equipment location.
- Contractor responsible for shutdown and isolation procedure for emergency and maintenance.

2. Operation and Maintenance

- The contractor shall provide operation and maintenance manuals in English.
- The contractor shall provide training for the technical staff on the operation of the PV System
- Supply of manual for Operation and Maintenance of all the system in English.
- Training to the user for operation and maintenance of the system after Installation and commissioning.
- Contractor responsible for detailed standard of system documentation which is necessary, so that safe operation and maintenance can be carried out throughout the life of the system. Operation and Maintenance manuals shall include information such as the following:
  - The location of all array isolators and applicable arrays/sub-arrays they serve.

- Identifying all distribution boards or sub-boards that the inverters are connected to, and their location.
- Full site-specific single-line schematic diagrams for the PV installation.
    - If necessary, site plans to show the location of the site meter, main switchboard and distribution boards which are connected to the solar PV installation.
    - Factors that can influence maintenance requirements include:
- Panel tilt angle (shallow tilt angles may require more frequent cleaning)
- Environmental factors (leaf litter, dust, salt spray, etc.)
- Fauna (birds, possums, rodents, etc.)
    - The contractor and installer shall document all maintenance actions that are required by the equipment manufacturers, and ensure any site specific maintenance actions are included.
    - The supplier must provide training of two people from each facility where the solar systems will be installed to operate and maintain the system. The training shall be undertaken on site and include the following subjects as a minimum:
- Solar PV system operation
- Inverter operation
- System monitoring
- Fault diagnosis
- Safety and emergency shutdown procedure

3. Testing and Commissioning

- After completion of installation work, the whole system shall be on trial runs for 20 continuous clear sunny days to test smooth functioning of power plant in every aspect. Only after satisfactory inspection by BEIT EL Baraka, the system will officially be commissioned.
- One set of operation manuals complete with as-built drawings, parts list (with part codes) circuit diagrams with list ratings of components and list of do's and don'ts for the main equipment as well as the sub-systems should be submitted.
- One set of maintenance manuals with full information on drawings, circuit diagrams, list and suppliers addresses for bought out parts, troubleshooting charts, programs of built in controllers etc. for the main equipment as well as for the sub-system.
- These manuals should be in the form of hard (printed) copy in English Language as well as in electronic storage form (disc pen drive etc.)

O. Guarantee & Warranty

- Overall system supplied should be covered by standard terms of warranty for a period of **5 years** for all system components, from the date of commissioning of the system approved after testing.

P. Operation and Maintenance

1. GENERAL

- The Contractor shall provide 1-day operation and daily maintenance training at each End--User school.
- Operation and maintenance DATA shall be submitted by the Contractor for the approval of Beit El Baraka, including but not limited to all of the specified Submittals and Documentation listed hereafter.

2. SUMMARY

- This Section includes administrative and procedural requirements for Operation and Maintenance (O&M) Manuals, including the following:
  - Preparing and submitting O&M Manuals for operating systems and equipment.
  - Preparing and submitting instruction manuals covering the care, preservation, and maintenance of engineered components, systems, architectural products and finishes.
  - Instruction of the Employer's operating personnel in the operation and maintenance of systems and equipment.

3. QUALITY ASSURANCE

- O&M Manual Preparation: In preparation of O&M Manuals, use personnel thoroughly trained and experienced in operation and maintenance of equipment or system involved.
  - Where O&M Manuals require written instructions, use personnel skilled in technical writing where necessary for communication of essential data.
  - Where O&M Manuals require drawings or diagrams, use CAD operators or drafters capable of preparing drawings clearly in a clear, understandable industry standard format.
  - System-Level O&M Manuals for mechanical and electrical systems shall be developed specifically for this Project. Compilation of equipment vendor catalogues and O&M Manuals is not acceptable.
- Instructions for the Employer's Personnel: Use experienced instructors thoroughly trained and experienced in operation and maintenance of equipment or system involved to instruct the Employer's O&M personnel.

4. SPECIAL CONTRACT CONDITION OF DEFECT LIABILITY PERIOD

- During Defect Liability Period, the Contractor must visit each school at least once every 6 months (twice in one year) for checking and confirming the proper operation of the PV system in coordination with the Client.
- The Contractor shall submit an Outcome report regarding the result to the Client with 1 week of the completion of the visit and the report must be endorsed by Client's representative.

Q. SPARE COMPONENTS

- The Contractor shall supply 10% spare PV modules to each school, rounded up to the nearest integer.

R. INSTRUCTIONS AND TRAINING FOR THE EMPLOYER'S PERSONNEL

- Prior to final inspection, instruct and train the Employer's personnel in operation, adjustment, and maintenance of products, equipment, and systems. Provide instruction at mutually agreed upon times.
- Use O&M Manual sections for each piece of equipment or system as the basis of training and instruction. Review contents in detail to explain all aspects of operation and maintenance.

ATTACHMENT 3
4.2 BOQ

GreenKode Consulting Engineers s.a.r.l.

BEIT EL BARAKA

DESIGN, SUPPLY AND INSTALLATION OF SOLAR PV SYSTEM FOR SCHOOLS LEBANON

SECTION 4.2

Bill of Quantities

MAY 2022

General Table of Contents

Description

General Notes
Bill No. 01 HYBRID PV SYSTEM TS1-6 KWP
Bill No. 02 HYBRID PV SYSTEM TS2-14.4 KWP
Bill No. 03 HYBRID PV SYSTEM TS3-21.6KWP
Bill No. 04 HYBRID PV SYSTEM TS4-32.4KWP
Bill No. 05 HYBRID PV SYSTEM TS5-38.4KWP
Bill No. 06 LOT A,B,C,D
Bill No. 07 SUMMARY

General Notes	
1	The Contractor shall refer to specification sections and drawings for each item mentioned in this BOQ. Each item in the Bo may be described in more than one section of the specifications, and it is the duty of the Contractor to ensure compliance with all listed requirements.
2	During tender process, the tenderer should study carefully all the document included in the tender and if he wishes to send any query, the tenderer should submit them to the procurement unit, who will reply to any raised query in due time. if the tenderer considers that there is any discrepancy or any missing item, the tenderer should address this issue during the tender phase to the procurement unit, who will take the necessary action.
3	Unit price shall include supply, storage, installation of all needed accessories for each item in addition to the testing and commissioning for the satisfaction of the Consultant/Employer , unless otherwise mentioned.
4	These General Requirements are applicable to all works whether they are Structural, Architectural and Electro-Mechanical.
5	The Contractor shall submit shop drawings for the Consultant/Employer approval as per requirements set in the Subcontract. The Contractor shall clearly list and tabulate all take-off-quantities on all shop drawings.
6	During the tender phase, the contractor should have deemed visited the site and make their self aware of all site conditions of the project such as but not limited to site access, roads, temporary facilities, temporary works, utilities etc.… During the site visit shall take all the necessary steps to ensure the right implementation of the project without any harm of the surrounding or of the existing buildings & utilities. having said that, the Employer will not accept any claim or variation on the cost related to the above at any circumstances after submission of the offer. Any potential contractor did not do a site visit, they are deemed accepted the above and will not be entitled to any claim whatsoever related to the above or not being able to do a site visit.
7	Lump Sum items in the BOQ are fixed prices for the duration of the project, and shall not be re-measured for compensation. And shall not be paid if not executed. Thus no claim or variation will be considered on account of his failure to acquaint himself with such information.
8	Quantities included in the Break of Lump Sum shall not be re-measured after execution. The Contract is a lump sum contract. The Contractor shall during tender phase, verify and check the quantities for any discrepancies or mistakes. In case of discrepancies, the Contractor shall during the tender phase raise this issue to the employer by sending to him a table showing the location of discrepancies for Employer's verification. The Employer will assess and answer the contractor's query with the amended quantities if there is any.
9	The Contractor's price shall embrace the costs of preparing a tender; for the final account; for overheads and profit; for customs and import duties; for temporary services and for all other statutory tax and establishment charges and costs of whatever nature. No claim for additional payment will be allowed for any error or misunderstanding by the Contractor in these respects.
10	The Contractor's price shall include for all materials, accessories and fittings, labor, storage and handling transportation, samples, testing coordination and for the provision and use of all plant, whether mechanical or Electrical Or Civil , required for carrying out of the works, in their proper sequence, for shifting, altering and adapting such temporary work and plant as may be required the progress of the works, and for removing plant and temporary works at completion and making good any surfaces disturbed.

General Notes	
11	All combined documents that form this contract shall be mutually complimentary, explanatory, cumulative, additive and not alternative and what is required by one document shall be required by all. In case of conflict, the Consultant/Employer shall determine which document governs and the contractor shall comply with Consultant/Employer decision without any claim for extra cost if this conflict is not related to design.
12	**Insurance:** The tenderer should provide all insurances as stipulated in the condition of contract. The tenderer shall include herein all cost related for those insurances. The contractor shall price herein any fees related to bank guarantee or advance bank guarantee if applicable. The Contractor's All-Risks Policy, which must also cover Third Party Liabilities , Workmen Compensation as per the subcontract Agreement.
13	**Coordination with other Contractor** The tenderer has the responsibility to coordinate at all time with effectiveness and required time as per the agreed or approved time frame with any contractor assigned by the Employer . Any delay or claim resulting from not fulfilling the above task or any claim between subcontractors, the contractor will be full responsible and he has the obligation to solve this claim. the duration of such coordination shall be effective during the contract period.
14	Coordination with Authorities As per the contract, The Contractor as part of their duties, shall coordinate, pay fees where required regarding connections of utilities, connections to infrastructure, access roads, fencing, and shall report all these matters to the Consultant/Employer and Employer. -All Coordination shall be done in presence of BEIT EL BARAKA field coordinators. -The contractor should always coordinate & inform the municipalities and any concerned authorities for any temporary blockage of roads or any road found necessary to execute the works. The contractor is responsible to set meeting & follow up any issue related to this project with the local & national authorities in presence of BEIT EL BARAKA field coordinators. Any amount resulted from the above is to be borne by the contractor. The contractor shall provide at any time access to labors of the Authorities to enter and do their job. The contractor shall provide all related site facility, safety equipment and necessary coordination to perform their works on site -Contractor to provide when needed any electricity power source to assure proper execution of the works under this contract. -Contractor shall repair any damage to existing infrastructure that is damaged due to the works executed on site. -Contractor shall incorporate daily fees for the delays in the project in the unit rate or provide it herein.
15	Protection, Accessibility, Coordination and Repairing of Adjacent Properties -The tenderer shall under this contract requirement take all safety measures to protect all adjacent properties. Moreover, the tenderer responsibility to always maintain the original or temporary access of those properties free from any debris, waste, damages or blockage at any time during this contract. -If the tenderer wishes to enter the adjacent properties for any reason, the tenderer shall inform the Employer and the land owner before 24 hours. Any action/damages/works resulted from this interference will be at the full responsibility of the tenderer. -If the tenderer wishes during the implementation to use any adjacent properties not related to the project, then the tenderer shall obtain the written approval of the owner of the properties. The tenderer will be fully responsible of any action, works, administered works, negotiation or any other action with the owner. the tenderer should take into consideration that the Employer staff & the Consultant/Employer will must have access as well to those properties. the Employer will not be responsible for any claim raised by the owner on the contractor/tenderer. -The tenderer/contractor shall be fully responsible of any payment resulted from the agreement between the contractor and the owner of the adjacent properties. The Employer shall be always informed about the permission approval and the contractor should indemnify the Employer from any claim whatsoever from the owner related to this agreement.
16	Unless otherwise mentioned, Contractor's unit rates shall take into consideration and accommodate for all the notes, details, and conditions of the drawings and specifications, as well as the following: a All concrete embedded items, such as: angles, angle frames, water stops at construction joints (such as between the mat foundation and the walls), rebar spacers, etc… b All exposed concrete edges shall be chamfered 2cmx2cm c Disposal: remove waste materials, including unsatisfactory soil, trash, waste, debris, etc... and dispose to an approved designated disposal area(s) outside site. d The Contractor shall reallocate available material/tanks if required on his own expenses for the proper installation of pv System. e The Contractor shall take care of roof waterproofing. It's his responsibility to repair in case of any damage Occur
17	All Materials and equipment must be ordered AFTER shop drawings/submittals approval by the Consultant/Employer or its representative.

General Notes	
18	ABBREVIATIONS: - Lump Sum = LS - Square Meter = m2 - Linear Meter = Lm - Number or Each = Nr., No., or Ea. - Provisional Sum = PS - Nominal Diameter = DN - Bill of Quantities = BOQ - Value Added Tax = VAT - Flange Pressure Rating = PN - Drawing = Dwg.
19	Contractor must perform and submit design for design review for constructability, consultant's approval and take full liability prior to final award or NTP. (Notice to proceed)
20	The Contractor shall comply with all the requirements and obligations contained in the Specifications and in particular the requirements of this Division such as but not limited to: -Training on the operation and maintenance of systems and the related sub-systems, personal and Employer Personnel -Tests for Civil, electrical , and mechanical works -Shop drawings -As-built drawings -Testing and commissioning with the appropriate tool as per Consultant/Employer requirement and specification. -The testing and commissioning of all electrical equipment and devices in accordance to NETA ATS (or applicable IEC standards).
21	The Contractor shall provide a complete training sessions to nominated personnel by the Client. A training program must be submitted for approval by the Consultant/Employer .
22	Management reports Contractor must submit within the first week from the contract signature Daily Report form, Monthly Report form, Request for Inspection form, Special Report, Submittal form, and any additional required forms to the Consultant/Employer for approval -Progress report to be submitted with each payment. This progress report must include: -The monthly progress report -Log sheet of the project
23	**Daily report:** must Include but not limited to the following: -Employee and visitors log sheet -List of equipment used -Product delivered to site -Completed task as mentioned in the time schedule and percent or quantity of completed works. -Progress Photos -Risks and/or accidents/incidents -Delays reasons if any.
24	**Weekly progress reports** must Include but not limited to the following: -Executive Summary -Transmittal logs -Product delivered to site -Completed task as mentioned in the time schedule and percent or quantity of completed works -Progress Photos -Risks and/or accidents/incidents -Delays reasons if any. -Updated weekly time schedule -Plans for next reporting Period
25	**Monthly progress reports** must Include but not limited to the following: -Executive Summary -Updated Transmittal logs -Product delivered to site -Completed task as mentioned in the time schedule and percent or quantity of completed works -Progress Photos -Risks and/or accidents/incidents -Delays reasons if any. -Updated Monthly time schedule (PDF and Editable format of primavera or MS project) -Plans for next reporting Period

General Notes	
26	**Time Schedule :** The updated time schedule, showing the progress of works, the occurred delay if any. the time schedule shall be in PDF and Editable format of primavera or MS project. The time schedule shall be detailed for each activity with allocated resources and cost. The S-Curve shall be presented within the progress of works.
27	List of documents and deliverables: -Health and safety Plan -Quality Control Plan -Environmental mitigation Plan -Submittal of Material -Transmittal Sheet for (Drawings, calculation notes, Reports, letters) -Confirmation of Verbal instruction -Request for site inspection -Material Inspection form -Calculation of wind resistance and snow load shall be submitted -The contractor shall submit calculation note for protection and disconnector sizing. -A Heat Load calculation for the inverters and the required Ventilation needed as per manufacturer recommendation -Short-circuit calculation on ETAB or Similar software -Electrical Drawings shall be complete including Power and control diagram, SLD's, Cable Schedule, Termination Schedule, - Cable routing layouts and requirements including trenching and conduit installation and details -the installation of any items on sites shall be previously approved on the Shop drawings with details such as but not limited to equipment layout in control room, etc. -Detailed Operation philosophy with list of equipment, - Design calculation notes along with structural models and design drawings for foundations and steel members of steel structure including connection details for Consultant/Employer 's review and approval. - Detailed execution drawing for the supply and erection of steel structure for Consultant/Employer 's review and approval.. - As Built drawings for Consultant/Employer 's review and approval.
28	**Mobilization/Demobilization** The rate shall include the full mobilization / demobilization of all resources and equipment necessary for the execution and completion of the works. The rate shall also include the design and construction of offices, stores, workshops, clinics and all other facilities required for the completion of the works under this Contract. The price shall be paid as a lump sum and the works shall include but not be limited to: -Protection of public and private properties, -All necessary procedures for the supply and testing of material in conformity with the specifications and as directed by the Consultant/Employer , -Temporary works and site protection, watching, fencing and lighting, -Supplying the required equipment in order to execute all the required works including but not limited to: 1) Transport material and equipment to the different parts of the project, 2) Ensure storage areas and disposal sites, 3) Supply Water and power to complete the works, 4)Management, operation and maintenance of site equipment, 5)Indemnification and remedying of all damages caused by the execution of the works to the private or public properties, 6)Guiding and protecting traffic and pedestrians through areas of construction including the erection of signs, barriers and lighting, 7)Operation and Maintenance manuals 8)-Shop Drawings 9)As-Built Drawings **Mobilization/Demobilization (Continued)** 9) Removal of utilities, plants, machinery and all other facilities after the completion of the works including reinstatement to the Consultant/Employer 's satisfactory, 10)Ensuring that all parts of the project are operating as required after the completion of the works and after testing and remedying of all defects that may appear while testing, 11) Completion of all procedures necessary for the taking over and commissioning, All items necessary to complete the mobilization / demobilization including all related costs. Although the Contractor is allowed to use the water establishments electric power and water during the execution of work, the Contractor shall furnish and make all necessary arrangements for standby power in case of EDL power outage. Standby generator shall have sufficient power to handle temporary lights, service for welding, use of contractor's tools and equipment, etc. in order to meet the project needs.
29	Contractor to provide proper tools, hoists, cranes, ladders, scaffolding and platforms as necessary to perform the Work. Contractor to also provide temporary stairs where ladders are not safe or adequate. During project performance, Contractor shall provide protection to permanent stairs, equipment, and structures, from damage during construction operations.

General Notes	
30	Contractor to provide covered dumpster (garbage bin) of suitable size, dedicated for field waste. Provide separate covered dumpster of adequate size for construction debris. Empty dumpsters on a regular basis and as directed. Dumpsters shall not exceed their capacities at any time.
31	Contractor to provide new equipment suitable for use intended.
32	Contractor assumes full responsibility for the complete and satisfactory installation and operation of the entire system , as specified.
33	Temporary Signs. Subcontractor to furnish and install temporary signs and safety warning sign. Signs shall remain maintained in good condition for the life of the construction period. Contractor to remove signs at final acceptance, unless otherwise directed by the Consultant/Employer .
34	**Safety, Health and Protection of the Works & Workpeople.** -The contractor shall during the contract period take all precaution & safety measures as per the contract to ensure a safe environment for workers and to do all the necessary safety support for the works. the contractor shall always have security signs on the site for better work environment. -The contractor shall strictly abide by the rules and laws set by this contract related to the welfare & safety of all personal, PPE on site. Moreover, the contractor shall implement any temporary work or facility related to safety or protection of works without any claim for extra cost.
35	**Injury or Accidents during the Implementation Phase** -As per this contract, the contractor shall report immediately to the Employer for any accident or injury happened during the works on site and the contractor shall take immediately any action to ensure a fast medical help or transportation to the hospital at his own cost without any claim for extra cost. the contractor shall upon occurrence of such accidents or injuries, they shall submit all related document & reports to the Employer detailing the accident and stating the preventive actions to be taken. -If any claim was made by anyone against the contractor related to the above, the contractor should immediately inform the Employer about such claims and to keep the Employer with any update related to this subject. -Suitable first aid Kit for each site -Emergency Contact list in each site
36	All necessary and desirable accessory equipment and auxiliaries not included with flow meters, whether specifically mentioned in this section or not, shall be furnished and installed by the contractor as required for an installation incorporated the highest standards for this type of service. Also included shall be supervisory services during installation of regular operating personnel in the proper care, operation and maintenance of the equipment by the manufacturer's or their qualified representative.
37	Contractor to install Signage for all Control room and shall include the following: Laminated Signage for Life Safety (Danger) Signs, Information signs and Equipment signs with clear colors and symbols.
38	The contractor shall submit a warranty letters that covers the cost of dismantling, shipment/transportation, reinstallation and commissioning of the defected equipment without any additional fees. Replacement of the defected equipment must be done within three working days.
39	The Contractor is strictly required to implement: - the COVID-19 "Health Safety Recommendation Handbook for Continuing Construction Activities During the CORONA epidemic". See Annex B : COVID 19 - Ministry of Health updated regulations related to construction activities.
40	**Copyright and Advertising:** Unless the Employer gives their permission in writing the Contractor: Has no right to use any part of tender documents for any reason other than the purpose of this project. All documents are protected by law Has no right to use any part of the tender documents for any advertising purposes
41	All proposals shall include Authorization letters by the manufacturers of all equipment, materials.
42	All proposals shall include letters by the manufacturers of all equipment, materials to guarantee the delivery time.

General Notes	
43	The manufacturer will have to provide test reports to back up all reliability and performance claims.

Item	Description	Unit	Estimated Quantity	Unit Rate (US $)	Amount (US $)
	Bill No. 01 HYBRID PV SYSTEM TS1-6 KWP				
1	**General**				
1.1	The solar power plant consists of a PV plant, Combined Box, hybrid inverters ,and Panel Distribution Board, Cables, cable management, and all related accessories to the proper functioning of the school. The Hybrid system is combined with Battery Bank. The power control system shall preview as well the connection of additional AC power sources from Automatic Transfer switch. Electrical installations and equipment shall be confirming to IEC. standards or equivalent. All outside solar equipment and protection from direct sunlight by not facing the sun during the mid-day by a sun shade. The Contractor shall install combiner Boxes and totalizer panel in sunshade area with easy access for maintenance, with platform or pad to ensure operators/electricians will not be standing in water or mud while working on this equipment.				
1.2	All below supplied equipment, material, accessories and installation shall be complete with all related accessories all as specified, and to the satisfaction of the Engineer.				
2	**Electrical Works**				
2.1	Supply, install, test, and commission of Solar module of a Mono Crystalline Photovoltaic half-cut cells 144 cells, minimum efficiency not less than 20%, Class A, IEC, CE,TUV, ISO 9001,14000 Certification, Salt Mist, PID Corrosion Test & Ammonia Corrosion Test, Positive power tolerance) -Contractor must submit the manufacturer's performance warranty for the solar panel should guaranty 90% production at ten years and 80% at twenty-five years and the equipment warranty shall be twelve years -Contractor must submit all the required certificates for each PV solar panel.				
2.1.1	Solar module of a Mono Crystalline minimum 600 Wp or higher for a total not less than **6 KWP**	LS	1		$ -
2.2	Supply, install, test and commission of Hybrid solar Inverter **8KW** with required Communication port to Solar-log data logger as per technical specifications, all as specified, shown on the drawings and to the	LS	1		$ -
2.3	Solar-log with remote monitoring WEB application to monitor the performance of the system (installation and supply of data logger, Power supply , software and fastening brackets)	LS	1		$ -

Item	Description	Unit	Estimated Quantity	Unit Rate (US $)	Amount (US $)
2.4	Supply, install, test and commission of the metallic support structures for PV panels to be installed on the roof of the School. The structure should be Hot dip galvanized, or Aluminum, corrosion resistant and can withstand wind speed 140 km/hr and Snow load 80 cm as indicated in the drawings. the mounting structure shall not damage the water proof of the roof . -All complete including precast concrete footings, all necessary accessories, devices and all other related works, all as specified, and to the satisfaction of the Engineer. -The contractor shall take care of Existing Waterproofing of the roof. -In Case of Tiled Roof, The Contractor shall verify that the existing structure can handle the additional weights of PV System.	LS	1		$ -
2.5	Supply and installation of hot-dip galvanized steel cable trays appropriately sized, Ventilated, or Perforated type with cover for outdoor and indoor use to protect the cables. The contractor shall submit details cable Tray layout with Installation details for approvals	LS	1		$ -
2.6	Supply and install of DC cables between combiner boxes, Totalizer and VFD, the cables shall be Resistant to extreme temperatures (-40°C to +120°C), ozone and UV, zero-halogen, low-smoke, and flame-retardant for enhanced fire security. -TUV -EN 50618:2014,IEC 60754-1/IEC 60754-2,IEC 60332-1,EN50289-4-17 method A, for 720h, EN50525-2-21). -DC voltage of 1.5 kV and a maximum DC voltage of 1.8 kV. -The cables Shall be suitable for permanent outdoor long-term use, under variable and harsh climate conditions. the DC voltage drop from PV panels to inverter shall not exceed 3%. -all Cables shall be covered and protected against physical damage and rats. -Cables between Combiner Boxes and Totalizer panels shall be CU/XLPE/PVC armored single core cables. -The price shall include tests and samples; Waste and Transport; Connections to equipment, fixtures, appliances, EMT conduit, trunking, Cable cleats, brackets, cable sleeves, Sinking ends of cables to expose the conductors and capping ends of cables; Cable cleats, brackets, and waterproof Joints.	LS	1		$ -
2.7	Supply, install and connect AC Cables CU/PVC/PVC cable including junction boxes, cable ladders or trays, cable cleats, cable glands, sealing compound, cable sleeves and all necessary accessories including conduits and liquid tight flexible conduits (for outdoor and wet areas) where necessary, as specified and to the approval of the Engineer.	LS	1		$ -
2.8	Supply, install, test and commission of Distribution panels, Combiner Boxes, accessories, protection devices, DC surge arrestors, Ac Surge arrestors and all necessary component for the proper protection and functioning of the system and all other related works, all as specified, and to the satisfaction of the Engineer.	LS	1		$ -
2.9	Supply, install, test and commission of Lithium batteries not less than 200Ah,48V, 6000 Cycle, depth of discharge is 90%.The contractor Shall ensure that Illumination, Ventilation, Room Temperature and Suitable for the proposed battery System.	No.	1		$ -
2.10	Electrical works (including the connection to EDL Grid and Genset Grid with all required accessories, smart meter, ,communication wiring, etc.),Additional electrical works for the adaptation/construction of the Main Distribution Board (MDB) and the AC connection board with the Selected loads in the school.	LS	1		$ -

Item	Description	Unit	Estimated Quantity	Unit Rate (US $)	Amount (US $)
3	**Earthing and Lightning Protection System**				
3.1	Supply, install, test and commission of an earthing system, including all elements and connections. A maximum value of 3 Ohms will be accepted. All following elements should be properly earthed. Connection of all electronic equipment to the existing earth system inside the technical room as per international standards including but not limited to PV panels frames, Mounting Structure, Cable trays, fences	LS	1		$ -
3.2	Supply, install, test and commission of a Lightning protection emission early streamer (ESE), complete including poles, down conductors, electrodes, earth pits and all related accessories. Covering the total area of the PV field and the room till the fences. A maximum value of 5 Ohms will be accepted. The ESE must cover the whole PV farm +20% in diameter from the farthest point of the PV	LS	1		$ -
4	**Labelling**				
4.1	Any element installed in the scope of this project should be clearly referenced and Labeled. Panels labels shall be engraved label in Arabic and English References are to be clearly shown on As-Built drawings and to the approval of the engineer. The labelling shall includes all signage at all disconnecting means including switches and circuit breakers in accordance	LS	1		$ -
4.2	Safety signs to be installed as per technical specs label shall be UV	LS	1		$ -
5	**Fire Fighting**				
	Fire Extinguishers (Portable)				
	Supply and install wall mounted portable fire extinguishers in manufacturer's standard enameled-metal container and to the satisfaction				
5.1	FE-2, Fire extinguisher , 5kg CO2	No.	1		$ -
6	**Spare parts**				
6.1	2% of solar modules ,	No.	1		$ -
6.2	2 set of Surge arrestor Fuses for each Model	LS	2		$ -
6.3	2 set of DC fuses of each sizes	LS	1		$ -
7	**Testing & Commissioning**				
7.1	Testing & commissioning and to the satisfaction of the Engineer.	LS	1		$ -
8	**O&M manuals and training**				
8.1	Provide O&M manuals as described in the specifications	LS	1		$ -
8.2	Provide a two days training program as described in the specifications	LS	1		$ -
	Sum of Bill No. 01 HYBRID PV SYSTEM TS1-6 KWP				**$ -**

Item	Description	Unit	Estimated Quantity	Unit Rate (US $)	Amount (US $)
	Bill No. 02 HYBRID PV SYSTEM TS2-14.4 KWP				
1	**General**				
1.1	The solar power plant consists of a PV plant, Combined Box, hybrid inverters ,and Panel Distribution Board, Cables, cable management, and all related accessories to the proper functioning of the school.The Hybrid system is combined with Battery Bank. The power control system shall preview as well the connection of additional AC power sources from Automatic Transfer switch. Electrical installations and equipment shall be confirming to IEC. standards or equivalent. All outside solar equipment and protection from direct sunlight by not facing the sun during the mid-day by a sun shade. The Contractor shall install combiner Boxes and totaliser panel in sunshaded area with easy access for maintenance, with platform or pad to ensure operators/electricians will not be standing in water or mud while working on this equipment.				
1.2	All below supplied equipment, material, accessories and installation shall be complete with all related accessories all as specified, and to the satisfaction of the Engineer.				
2	**Electrical Works**				
2.1	Supply, install, test, and commission of Solar module of a Mono Crystalline Photovoltaic half-cut cells 144 cells, minimum efficiency not less than 20%, Class A, IEC, CE,TUV, ISO 9001,14000 Certification, Salt Mist, PID Corrosion Test & Ammonia Corrosion Test, Positive power tolerance) -Contractor must submit the manufacturer's performance warranty for the solar panel should guaranty 90% production at ten years and 80% at twenty-five years and the equipment warranty shall be twelve years -Contractor must submit all the required certificates for each PV solar panel.				
2.1.1	Solar module of a Mono Crystalline minimum 600 Wp or higher for a total not less than **14.4 KWP**	LS	1		$ -
2.2	Supply, install, test and commission of Ongrid-Offgrid Hybrid solar Inverter up to 20KW with Required Communication port to Solar-log data logger as per technical specifications, all as specified, shown on the drawings and to the satisfaction of the Engineer.	LS	1		$ -
2.3	Solar-log with remote monitoring WEB application to monitor the performance of the system (installation and supply of data logger, Power supply , software and fastening brackets)	LS	1		$ -

Item	Description	Unit	Estimated Quantity	Unit Rate (US $)	Amount (US $)
2.4	Supply, install, test and commission of the metallic support structures for PV panels to be installed on the roof of the School. The structure should be Hot dip galvanized, or Aluminium, corrosion resistant and can withstand wind speed 140 km/hr and Snow load 80 cm as indicated in the drawings. the mounting structure shall not damage the water proof of the roof . -All complete including precast concrete footings, all necessary accessories, devices and all other related works, all as specified, and to the satisfaction of the Engineer. -The contractor shall take care of Existing Waterproofing of the roof. -In Case of Tiled Roof, The Contractor shall verify that the existing structure can handle the additional weights of PV System.	LS	1		$ -
2.5	Supply and installation of hot-dip galvanized steel cable trays appropriately sized, Ventilated, or Perforated type with cover for outdoor and indoor use to protect the cables. The contractor shall submit detailes cable Tray layout with Installation details for approvals	LS	1		$ -
2.6	Supply and install of DC cables between combiner boxes, Totaliser and VFD, the cables shall be Resistant to extreme temperatures (-40°C to +120°C), ozone and UV, zero-halogen, low-smoke, and flame-retardant for enhanced fire security. -TUV -EN 50618:2014,IEC 60754-1/IEC 60754-2,IEC 60332-1,EN50289-4-17 method A, for 720h, EN50525-2-21). -DC voltage of 1.5 kV and a maximum DC voltage of 1.8 kV. -The cables Shall be suitable for permanent outdoor long-term use, under variable and harsh climate conditions. the DC voltage drop from PV panels to inverter shall not exceed 3%. -all Cables shall be covered and protected against physical damage and rats. -Cables between Combiner Boxes and Totalizer panels shall be CU/XLPE/PVC armored single core cables. -The price shall include tests and samples; Waste and Transport; Connections to equipment, fixtures, appliances, EMT conduit, trunking, Cable cleats, brackets, cable sleeves, Sinking ends of cables to expose the conductors and capping ends of cables; Cable cleats, brackets, and waterproof Joints. -All as specified, and to the satisfaction of the Engineer.	LS	1		$ -
2.7	Supply, install and connect AC Cables CU/PVC/PVC cable including junction boxes, cable ladders or trays, cable cleats, cable glands, sealing compound, cable sleeves and all necessary accessories including conduits and liquid tight flexible conduits (for outdoor and wet areas) where necessary, as specified and to the approval of the Engineer.	LS	1		$ -
2.8	Supply, install, test and commission of Distribution panels, Combiner Boxes, accessories, protection devices, DC surge arrestors, Ac Surge arrestors and all necessary component for the proper protection and functioning of the system and all other related works, all as specified, and to the satisfaction of the Engineer.	LS	1		$ -

Item	Description	Unit	Estimated Quantity	Unit Rate (US $)	Amount (US $)
2.9	Supply, install, test and commission of Lithium batteries not less than 200Ah,48V, 6000 Cycle, depth of discharge is 90%.The contractor Shall ensure that Illumination, Ventillation, Room Temperature and Suitable for the proposed battery System.	No.	3		$ -
2.10	Electrical works (including the connection to EDL Grid and Genset Grid with all required accessories, smart meter, ,communication wiring, etc.),Additional electrical works for the adaptation/construction of the Main Distribution Board (MDB) and the AC connection board with the Selected loads in the school.	LS	1		$ -
3	**Earthing and Lightning Protection System**				
3.1	Supply, install, test and commission of an earthing system, including all elements and connections. A maximum value of 3 Ohms will be accepted. All following elements should be properly earthed. Connection of all electronic equipment to the existing earth system inside the technical room as per international standards including but not limited to PV panels frames, Mounting Structure, Cable trays, fences	LS	1		$ -
3.2	Supply, install, test and commission of a Lightning protection emission early streamer (ESE), complete including poles, down conductors, electrodes, earth pits and all related accessories. Covering the total area of the PV field and the room till the fences. A maximum value of 5 Ohms will be accepted. The ESE must cover the whole PV farm +20% in diameter from the farthest point of the PV	LS	1		$ -
4	**Labelling**				
4.1	Any element installed in the scope of this project should be clearly referenced and Labeled. Panels labels shall be engraved label in Arabic and English References are to be clearly shown on As-Built drawings and to the approval of the engineer. The labelling shall includes all signage at all disconnecting means including switches and circuit breakers in accordance	LS	1		$ -
4.2	Safety signs to be installed as per technical specs label shall be UV	LS	1		$ -
5	**Fire Fighting**				
	Fire Extinguishers (Portable)				
	Supply and install wall mounted portable fire extinguishers in manufacturer's standard enameled-metal container and to the satisfaction				
5.1	FE-2, Fire extinguisher , 5kg CO2	No.	1		$ -
6	**Spare parts**				
6.1	2% of solar modules ,	No.	1.0		$ -
6.2	2 set of Surge arrestor Fuses for each Model	LS	2		$ -
6.3	2 set of DC fuses of each sizes	LS	1		$ -
7	**Testing & Commissioning**				
7.1	Testing & commissioning and to the satisfaction of the Engineer.	LS	1		$ -
8	**O&M manuals and training**				
8.1	Provide O&M manuals as described in the specifications	LS	1		$ -
8.2	Provide a two days training program as described in the specifications	LS	1		$ -
	Sum of Bill No. 02 HYBRID PV SYSTEM TS2-14.4 KWP				**$ -**

Item	Description	Unit	Estimated Quantity	Unit Rate (US $)	Amount (US $)
	Bill No. 03 HYBRID PV SYSTEM TS3-21.6KWP				
1	**General**				
1.1	The solar power plant consists of a PV plant, Combined Box, hybrid inverters ,and Panel Distribution Board, Cables, cable management, and all related accessories to the proper functioning of the school.The Hybrid system is combined with Battery Bank. The power control system shall preview as well the connection of additional AC power sources from Automatic Transfer switch. Electrical installations and equipment shall be confirming to IEC. standards or equivalent. All outside solar equipment and protection from direct sunlight by not facing the sun during the mid-day by a sun shade. The Contractor shall install combiner Boxes and totaliser panel in sunshaded area with easy access for maintenance, with platform or pad to ensure operators/electricians will not be standing in water or mud while working on this equipment.				
1.2	All below supplied equipment, material, accessories and installation shall be complete with all related accessories all as specified, and to the satisfaction of the Engineer.				
2	**Electrical Works**				
2.1	Supply, install, test, and commission of Solar module of a Mono Crystalline Photovoltaic half-cut cells 144 cells, minimum efficiency not less than 20%, Class A, IEC, CE,TUV, ISO 9001,14000 Certification, Salt Mist, PID Corrosion Test & Ammonia Corrosion Test, Positive power tolerance) -Contractor must submit the manufacturer's performance warranty for the solar panel should guaranty 90% production at ten years and 80% at twenty-five years and the equipment warranty shall be twelve years -Contractor must submit all the required certificates for each PV solar panel.				
2.1.1	Solar module of a Mono Crystalline minimum 600 Wp or higher for a total not less than **21.6 KWP**	LS	1		$ -
2.2	Supply, install, test and commission of Hybrid solar Inverter Up to 24 KW with Required Communication port to Solar-log data logger as per technical specifications, all as specified, shown on the drawings and to the satisfaction of the Engineer.	LS	1		$ -
2.3	Solar-log with remote monitoring WEB application to monitor the performance of the system (installation and supply of data logger, Power supply , software and fastening brackets)	LS	1		$ -
2.4	Supply, install, test and commission of the metallic support structures for PV panels to be installed on the roof of the School. The structure should be Hot dip galvanized, or Aluminium, corrosion resistant and can withstand wind speed 140 km/hr and Snow load 80 cm as indicated in the drawings. the mounting structure shall not damage the water proof of the roof . -All complete including precast concrete footings, all necessary accessories, devices and all other related works, all as specified, and to the satisfaction of the Engineer. -The contractor shall take care of Existing Waterproofing of the roof. -In Case of Tiled Roof, The Contractor shall verify that the existing structure can handle the additional weights of PV System.	LS	1		$ -

Item	Description	Unit	Estimated Quantity	Unit Rate (US $)	Amount (US $)
2.5	Supply and installation of hot-dip galvanized steel cable trays appropriately sized, Ventilated, or Perforated type with cover for outdoor and indoor use to protect the cables. The contractor shall submit detailes cable Tray layout with Installation details for approvals	LS	1		$ -
2.6	Supply and install of DC cables between combiner boxes, Totaliser and VFD, the cables shall be Resistant to extreme temperatures (-40°C to +120°C), ozone and UV, zero-halogen, low-smoke, and flame-retardant for enhanced fire security. -TUV -EN 50618:2014,IEC 60754-1/IEC 60754-2,IEC 60332-1,EN50289-4-17 method A, for 720h, EN50525-2-21). -DC voltage of 1.5 kV and a maximum DC voltage of 1.8 kV. -The cables Shall be suitable for permanent outdoor long-term use, under variable and harsh climate conditions. the DC voltage drop from PV panels to inverter shall not exceed 3%. -all Cables shall be covered and protected against physical damage and rats. -Cables between Combiner Boxes and Totalizer panels shall be CU/XLPE/PVC armored single core cables. -The price shall include tests and samples; Waste and Transport; Connections to equipment, fixtures, appliances, EMT conduit, trunking, Cable cleats, brackets, cable sleeves, Sinking ends of cables to expose the conductors and capping ends of cables; Cable cleats, brackets, and waterproof Joints. -All as specified, and to the satisfaction of the Engineer	LS	1		$ -
2.7	Supply, install and connect AC Cables CU/PVC/PVC cable including junction boxes, cable ladders or trays, cable cleats, cable glands, sealing compound, cable sleeves and all necessary accessories including conduits and liquid tight flexible conduits (for outdoor and wet areas) where necessary, as specified and to the approval of the Engineer.	LS	1		$ -
2.8	Supply, install, test and commission of Distribution panels, Combiner Boxes, accessories, protection devices, DC surge arrestors, Ac Surge arrestors and all necessary component for the proper protection and functioning of the system and all other related works, all as specified, and to the satisfaction of the Engineer.	LS	1		$ -

Item	Description	Unit	Estimated Quantity	Unit Rate (US $)	Amount (US $)
2.9	Supply, install, test and commission of Lithium batteries not less than 200Ah,48V, 6000 Cycle, depth of discharge is 90%.The contractor Shall ensure that Illumination, Ventillation, Room Temperature and Suitable for the proposed battery System.	No.	3		$ -
2.10	Electrical works (including the connection to EDL Grid and Genset Grid with all required accessories, smart meter, ,communication wiring, etc.),Additional electrical works for the adaptation/construction of the Main Distribution Board (MDB) and the AC connection board with the Selected loads in the school.	LS	1		$ -
3	**Earthing and Lightning Protection System**				
3.1	Supply, install, test and commission of an earthing system, including all elements and connections. A maximum value of 3 Ohms will be accepted. All following elements should be properly earthed. Connection of all electronic equipment to the existing earth system inside the technical room as per international standards including but not limited to PV panels frames, Mounting Structure, Cable trays, fences	LS	1		$ -
3.2	Supply, install, test and commission of a Lightning protection emission early streamer (ESE), complete including poles, down conductors, electrodes, earth pits and all related accessories. Covering the total area of the PV field and the room till the fences. A maximum value of 5 Ohms will be accepted. The ESE must cover the whole PV farm +20% in diameter from the farthest point of the PV structures	LS	1		$ -
4	**Labelling**				
4.1	Any element installed in the scope of this project should be clearly referenced and Labeled. Panels labels shall be engraved label in Arabic and English References are to be clearly shown on As-Built drawings and to the approval of the engineer. The labelling shall includes all signage at all disconnecting means including switches and circuit breakers in accordance	LS	1		$ -
4.2	Safety signs to be installed as per technical specs label shall be UV	LS	1		$ -
5	**Fire Fighting**				
	Fire Extinguishers (Portable)				
	Supply and install wall mounted portable fire extinguishers in manufacturer's standard enameled-metal container and to the satisfaction				
5.1	FE-2, Fire extinguisher , 5kg CO2	No.	1		$ -
6	**Spare parts**				
6.1	2% of solar modules ,	No.	2		$ -
6.2	2 set of Surge arrestor Fuses for each Model	LS	2		$ -
6.3	2 set of DC fuses of each sizes	LS	1		$ -
7	**Testing & Commissioning**				
7.1	Testing & commissioning and to the satisfaction of the Engineer.	LS	1		$ -
8	**O&M manuals and training**				
8.1	Provide O&M manuals as described in the specifications	LS	1		$ -
8.2	Provide a two days training program as described in the specifications	LS	1		$ -
	Sum of Bill No. 03 HYBRID PV SYSTEM TS3-21.6KWP				**$ -**

Item	Description	Unit	Estimated Quantity	Unit Rate (US $)	Amount (US $)
	Bill No. 04 HYBRID PV SYSTEM TS4-32.4KWP				
1	**General**				
1.1	The solar power plant consists of a PV plant, Combined Box, hybrid inverters ,and Panel Distribution Board, Cables, cable management, and all related accessories to the proper functioning of the school. The Hybrid system is combined with Battery Bank. The power control system shall preview as well the connection of additional AC power sources from Automatic Transfer switch. Electrical installations and equipment shall be confirming to IEC. standards or equivalent. All outside solar equipment and protection from direct sunlight by not facing the sun during the mid-day by a sun shade. The Contractor shall install combiner Boxes and totalizer panel in sunshade area with easy access for maintenance, with platform or pad to ensure operators/electricians will not be standing in water or mud while working on this equipment.				
1.2	All below supplied equipment, material, accessories and installation shall be complete with all related accessories all as specified, and to the satisfaction of the Engineer.				
2	**Electrical Works**				
2.1	Supply, install, test, and commission of Solar module of a Mono Crystalline Photovoltaic half-cut cells 144 cells, minimum efficiency not less than 20%, Class A, IEC, CE,TUV, ISO 9001,14000 Certification, Salt Mist, PID Corrosion Test & Ammonia Corrosion Test, Positive power tolerance) -Contractor must submit the manufacturer's performance warranty for the solar panel should guaranty 90% production at ten years and 80% at twenty-five years and the equipment warranty shall be twelve years -Contractor must submit all the required certificates for each PV solar panel.				
2.1.1	Solar module of a Mono Crystalline minimum 600 Wp or higher for a total not less than **32.4 KWP**	LS	1		$ -
2.2	Supply, install, test and commission of Hybrid solar Inverter up to 24KW with Required Communication port to Solar-log data logger as per technical specifications, all as specified, shown on the drawings and to the satisfaction of the Engineer.	LS	1		$ -
2.3	Solar-log with remote monitoring WEB application to monitor the performance of the system (installation and supply of data logger, Power supply , software and fastening brackets)	LS	1		$ -
2.4	Supply, install, test and commission of the metallic support structures for PV panels to be installed on the roof of the School. The structure should be Hot dip galvanized, or Aluminum, corrosion resistant and can withstand wind speed 140 km/hr and Snow load 80 cm as indicated in the drawings. the mounting structure shall not damage the water proof of the roof . -All complete including precast concrete footings, all necessary accessories, devices and all other related works, all as specified, and to the satisfaction of the Engineer. -The contractor shall take care of Existing Waterproofing of the roof. -In Case of Tiled Roof, The Contractor shall verify that the existing structure can handle the additional weights of PV System.	LS	1		$ -

Item	Description	Unit	Estimated Quantity	Unit Rate (US $)	Amount (US $)
2.5	Supply and installation of hot-dip galvanized steel cable trays appropriately sized, Ventilated, or Perforated type with cover for outdoor and indoor use to protect the cables. The contractor shall submit details cable Tray layout with Installation details for approvals	LS	1		$ -
2.6	Supply and install of DC cables between combiner boxes, Totalizer and VFD, the cables shall be Resistant to extreme temperatures (-40°C to +120°C), ozone and UV, zero-halogen, low-smoke, and flame-retardant for enhanced fire security. -TUV -EN 50618:2014,IEC 60754-1/IEC 60754-2,IEC 60332-1,EN50289-4-17 method A, for 720h, EN50525-2-21). -DC voltage of 1.5 kV and a maximum DC voltage of 1.8 kV. -The cables Shall be suitable for permanent outdoor long-term use, under variable and harsh climate conditions. the DC voltage drop from PV panels to inverter shall not exceed 3%. -all Cables shall be covered and protected against physical damage and rats. -Cables between Combiner Boxes and Totalizer panels shall be CU/XLPE/PVC armored single core cables. -The price shall include tests and samples; Waste and Transport; Connections to equipment, fixtures, appliances, EMT conduit, trunking, Cable cleats, brackets, cable sleeves, Sinking ends of cables to expose the conductors and capping ends of cables; Cable cleats, brackets, and waterproof Joints. -All as specified, and to the satisfaction of the Engineer.	LS	1		$ -
2.7	Supply, install and connect AC Cables CU/PVC/PVC cable including junction boxes, cable ladders or trays, cable cleats, cable glands, sealing compound, cable sleeves and all necessary accessories including conduits and liquid tight flexible conduits (for outdoor and wet areas) where necessary, as specified and to the approval of the Engineer.	LS	1		$ -
2.8	Supply, install, test and commission of Distribution panels, Combiner Boxes, accessories, protection devices, DC surge arrestors, Ac Surge arrestors and all necessary component for the proper protection and functioning of the system and all other related works, all as specified, and to the satisfaction of the Engineer.	LS	1		$ -

Item	Description	Unit	Estimated Quantity	Unit Rate (US $)	Amount (US $)
2.9	Supply, install, test and commission of Lithium batteries not less than 200Ah,48V, 6000 Cycle, depth of discharge is 90%.The contractor Shall ensure that Illumination, Ventilation, Room Temperature and Suitable for the proposed battery System.	No.	4		$ -
2.10	Electrical works (including the connection to EDL Grid and Genset Grid with all required accessories, smart meter, ,communication wiring, etc.),Additional electrical works for the adaptation/construction of the Main Distribution Board (MDB) and the AC connection board with the Selected loads in the school.	LS	1		$ -
3	**Earthing and Lightning Protection System**				
3.1	Supply, install, test and commission of an earthing system, including all elements and connections. A maximum value of 3 Ohms will be accepted. All following elements should be properly earthed. Connection of all electronic equipment to the existing earth system inside the technical room as per international standards including but not limited to PV panels frames, Mounting Structure, Cable trays, fences	LS	1		$ -
3.2	Supply, install, test and commission of a Lightning protection emission early streamer (ESE), complete including poles, down conductors, electrodes, earth pits and all related accessories. Covering the total area of the PV field and the room till the fences. A maximum value of 5 Ohms will be accepted. The ESE must cover the whole PV farm +20% in diameter from the farthest point of the PV structures	LS	1		$ -
4	**Labelling**				
4.1	Any element installed in the scope of this project should be clearly referenced and Labeled. Panels labels shall be engraved label in Arabic and English References are to be clearly shown on As-Built drawings and to the approval of the engineer. The labelling shall includes all signage at all disconnecting means including switches and circuit breakers in accordance with NEC article 690.17.	LS	1		$ -
4.2	Safety signs to be installed as per technical specs label shall be UV resistant,	LS	1		$ -
5	**Fire Fighting**				
	Fire Extinguishers (Portable)				
	Supply and install wall mounted portable fire extinguishers in manufacturer's standard enameled-metal container and to the satisfaction				
5.1	FE-2, Fire extinguisher , 5kg CO2	No.	1		$ -
6	**Spare parts**				
6.1	2% of solar modules ,	No.	2		$ -
6.2	2 set of Surge arrestor Fuses for each Model	LS	2		$ -
6.3	2 set of DC fuses of each sizes	LS	1		$ -
7	**Testing & Commissioning**				
7.1	Testing & commissioning and to the satisfaction of the Engineer.	LS	1		$ -
8	**O&M manuals and training**				
8.1	Provide O&M manuals as described in the specifications	LS	1		$ -
8.2	Provide a two days training program as described in the specifications	LS	1		$ -
	Sum of Bill No. 04 HYBRID PV SYSTEM TS4-32.4KWP				**$ -**

Item	Description	Unit	Estimated Quantity	Unit Rate (US $)	Amount (US $)
	Bill No. 05 HYBRID PV SYSTEM TS5-38.4KWP				
1	**General**				
1.1	The solar power plant consists of a PV plant, Combined Box, hybrid inverters ,and Panel Distribution Board, Cables, cable management, and all related accessories to the proper functioning of the school. The Hybrid system is combined with Battery Bank. The power control system shall preview as well the connection of additional AC power sources from Automatic Transfer switch. Electrical installations and equipment shall be confirming to IEC. standards or equivalent. All outside solar equipment and protection from direct sunlight by not facing the sun during the mid-day by a sun shade. The Contractor shall install combiner Boxes and totalizer panel in sunshade area with easy access for maintenance, with platform or pad to ensure operators/electricians will not be standing in water or mud while working on this equipment.				
1.2	All below supplied equipment, material, accessories and installation shall be complete with all related accessories all as specified, and to the satisfaction of the Engineer.				
2	**Electrical Works**				
2.1	Supply, install, test, and commission of Solar module of a Mono Crystalline Photovoltaic half-cut cells 144 cells, minimum efficiency not less than 20%, Class A, IEC, CE,TUV, ISO 9001,14000 Certification, Salt Mist, PID Corrosion Test & Ammonia Corrosion Test, Positive power tolerance) -Contractor must submit the manufacturer's performance warranty for the solar panel should guaranty 90% production at ten years and 80% at twenty-five years and the equipment warranty shall be twelve years -Contractor must submit all the required certificates for each PV solar panel.				
2.1.1	Solar module of a Mono Crystalline minimum 600 Wp or higher for a total not less than **38.4 KWP**	LS	1		$ -
2.2	Supply, install, test and commission of Hybrid solar Inverter up to 36KW with Required Communication port to Solar-log data logger as per technical specifications, all as specified, shown on the drawings and to the satisfaction of the Engineer.	LS	1		$ -
2.3	Solar-log with remote monitoring WEB application to monitor the performance of the system (installation and supply of data logger, Power supply , software and fastening brackets)	LS	1		$ -
2.4	Supply, install, test and commission of the metallic support structures for PV panels to be installed on the roof of the School. The structure should be Hot dip galvanized, or Aluminum, corrosion resistant and can withstand wind speed 140 km/hr and Snow load 80 cm as indicated in the drawings. the mounting structure shall not damage the water proof of the roof . -All complete including precast concrete footings, all necessary accessories, devices and all other related works, all as specified, and to the satisfaction of the Engineer. -The contractor shall take care of Existing Waterproofing of the roof. -In Case of Tiled Roof, The Contractor shall verify that the existing structure can handle the additional weights of PV System.	LS	1		$ -

Item	Description	Unit	Estimated Quantity	Unit Rate (US $)	Amount (US $)
2.5	Supply and installation of hot-dip galvanized steel cable trays appropriately sized, Ventilated, or Perforated type with cover for outdoor and indoor use to protect the cables. The contractor shall submit details cable Tray layout with Installation details for approvals	LS	1		$ -
2.6	Supply and install of DC cables between combiner boxes, Totalizer and VFD, the cables shall be Resistant to extreme temperatures (-40°C to +120°C), ozone and UV, zero-halogen, low-smoke, and flame-retardant for enhanced fire security. -TUV -EN 50618:2014,IEC 60754-1/IEC 60754-2,IEC 60332-1,EN50289-4-17 method A, for 720h, EN50525-2-21). -DC voltage of 1.5 kV and a maximum DC voltage of 1.8 kV. -The cables Shall be suitable for permanent outdoor long-term use, under variable and harsh climate conditions. the DC voltage drop from PV panels to inverter shall not exceed 3%. -all Cables shall be covered and protected against physical damage and rats. -Cables between Combiner Boxes and Totalizer panels shall be CU/XLPE/PVC armored single core cables. -The price shall include tests and samples; Waste and Transport; Connections to equipment, fixtures, appliances, EMT conduit, trunking, Cable cleats, brackets, cable sleeves, Sinking ends of cables to expose the conductors and capping ends of cables; Cable cleats, brackets, and waterproof Joints	LS	1		$ -
2.7	Supply, install and connect AC Cables CU/PVC/PVC cable including junction boxes, cable ladders or trays, cable cleats, cable glands, sealing compound, cable sleeves and all necessary accessories including conduits and liquid tight flexible conduits (for outdoor and wet areas) where necessary, as specified and to the approval of the Engineer.	LS	1		$ -
2.8	Supply, install, test and commission of Distribution panels, Combiner Boxes, accessories, protection devices, DC surge arrestors, Ac Surge arrestors and all necessary component for the proper protection and functioning of the system and all other related works, all as specified, and to the satisfaction of the Engineer.	LS	1		$ -
2.9	Supply, install, test and commission of Lithium batteries not less than 200Ah,48V, 6000 Cycle, depth of discharge is 90%.The contractor Shall ensure that Illumination, Ventilation, Room Temperature and Suitable for the proposed battery System.	No.	5		$ -

Item	Description	Unit	Estimated Quantity	Unit Rate (US $)	Amount (US $)
2.10	Electrical works (including the connection to EDL Grid and Genset Grid with all required accessories, smart meter, ,communication wiring, etc.),Additional electrical works for the adaptation/construction of the Main Distribution Board (MDB) and the AC connection board with the Selected loads in the school.	LS	1		$ -
3	**Earthing and Lightning Protection System**				
3.1	Supply, install, test and commission of an earthing system, including all elements and connections. A maximum value of 3 Ohms will be accepted. All following elements should be properly earthed. Connection of all electronic equipment to the existing earth system inside the technical room as per international standards including but not limited to PV panels frames, Mounting Structure, Cable trays, fences	LS	1		$ -
3.2	Supply, install, test and commission of a Lightning protection emission early streamer (ESE), complete including poles, down conductors, electrodes, earth pits and all related accessories. Covering the total area of the PV field and the room till the fences. A maximum value of 5 Ohms will be accepted. The ESE must cover the whole PV farm +20% in diameter from the farthest point of the PV	LS	1		$ -
4	**Labelling**				
4.1	Any element installed in the scope of this project should be clearly referenced and Labeled. Panels labels shall be engraved label in Arabic and English References are to be clearly shown on As-Built drawings and to the approval of the engineer. The labelling shall includes all signage at all disconnecting means including switches and circuit breakers in accordance	LS	1		$ -
4.2	Safety signs to be installed as per technical specs label shall be UV	LS	1		$ -
5	**Fire Fighting**				
	Fire Extinguishers (Portable)				
	Supply and install wall mounted portable fire extinguishers in manufacturer's standard enameled-metal container and to the satisfaction				
5.1	FE-2, Fire extinguisher , 5kg CO2	No.	1		$ -
6	**Spare parts**				
6.1	2% of solar modules ,	No.	2		$ -
6.2	2 set of Surge arrestor Fuses for each Model	LS	2		$ -
6.3	2 set of DC fuses of each sizes	LS	1		$ -
7	**Testing & Commissioning**				
7.1	Testing & commissioning and to the satisfaction of the Engineer.	LS	1		$ -
8	**O&M manuals and training**				
8.1	Provide O&M manuals as described in the specifications	LS	1		$ -
8.2	Provide a two days training program as described in the specifications	LS	1		$ -
	Sum of Bill No. 05 HYBRID PV SYSTEM TS5-38.4KWP				**$ -**

GreenKode Consulting Engineers s.a.r.l.

BEIT EL BARAKA

DESIGN, SUPPLY AND INSTALLATION OF SOLAR PV SYSTEM FOR SCHOOLS — **Bill of Quantities**

LEBANON — **Bill No. 06 LOT A,B,C,D**

Item	Description	Type	Unit	Estimated Quantity	Unit Rate (US $)	Amount (US $)
	Bill No. 06 LOT A,B,C,D					
1	**Lot A**					
1.01	Mobilization and Demobilization					
	Include all necessary "Mobilization" to site and "Demobilization" on completion of the Works as specified		LS	1		
1.02	INSURANCE:					
	Provide from an approved insurance company all required "Insurances" described in the Contract. Contractor's All-Risks Policy, which must also cover 3rd Party Liabilities , Workmen Compensation as per the subcontract Agreement .		LS	1		
1.03	HEALTH SAFETY & ENVIRONMENT REQUIREMENTS					
	Contractor shall abide by the safety rules and regulations . Contractor shall be responsible of all safety issues onsite and shall provide the necessary safety tools and equipment to maintain and ensure safety culture at all times. Contractor to submit a Health and Safety Plan, Environmental Mitigation plan to be approved by Engineer prior to start of work.		LS	1		
1.04	SOLAR SYSTEM					
1.04.01	F006-6-Ecole St Maroun Des Pères Antonins Hadath-Baabda-TS2	TS2	LS	1	$ -	$ -
1.04.02	F015-15-Collège des Soeurs du Rosaire Abdin-dekwaneh-TS2	TS2	LS	1	$ -	$ -
1.04.03	F065-65-FC-Saint Vincent De Paul Broumana-Broummana-TS2	TS2	LS	1	$ -	$ -
1.04.04	F067-67-Sainte Famille Maronite - Notre Dame de la Délivrance - Zalka-Zalka-TS2	TS2	LS	1	$ -	$ -
1.04.05	F102-102-Archevêché Maronite D'Antélias-Collège Saint Georges Zalka-Zalka-TS2	TS2	LS	1	$ -	$ -
1.04.06	F026-26-FC Saint Vincent De Paul Clémenceau-Climenceau Beirut-TS3	TS3	LS	1	$ -	$ -
1.04.07	F073-73-Soeurs De La Charité De Besançon Baskinta-Beirut-TS4	TS4	LS	1	$ -	$ -
1.04.08	F064-64-Ecole des Freres Maristes - Champville-Dik El Mehdi-Mazreaet Yachoua-TS5	TS5	LS	1	$ -	$ -
1.04.09	F075-75-Collège Des Soeurs Du Rosaire Mountazah-Mansouriyyeh-TS5	TS5	LS	1	$ -	$ -
1.04.10	F078-78-Notre Dame du Mont Carmel Fanar-TS5	TS5	LS	1	$ -	$ -
1.04.11	F081-81-Collège De La Sainte Famille Francaise Fanar-TS5	TS5	LS	1	$ -	$ -
1.04.12	F086-86-Mekhitarist School-Sad El Bouchriyeh-TS5	TS5	LS	1	$ -	$ -
					Sum of Lot A	**$ -**

GreenKode Consulting Engineers s.a.r.l.

BEIT EL BARAKA

DESIGN, SUPPLY AND INSTALLATION OF SOLAR PV SYSTEM FOR SCHOOLS — **Bill of Quantities**

LEBANON — **Bill No. 06 LOT A,B,C,D**

Item	Description	Type	Unit	Estimated Quantity	Unit Rate (US $)	Amount (US $)
2	**Lot B**					
2.01	Mobilization and Demobilization					
	Include all necessary "Mobilization" to site and "Demobilization" on completion of the Works as specified		LS	1		
2.02	INSURANCE:					
	Provide from an approved insurance company all required "Insurances" described in the Contract. Contractor's All-Risks Policy, which must also cover 3rd Party Liabilities , Workmen Compensation as per the subcontract Agreement .		LS	1		
2.03	HEALTH SAFETY & ENVIRONMENT REQUIREMENTS					
	Contractor shall abide by the safety rules and regulations . Contractor shall be responsible of all safety issues onsite and shall provide the necessary safety tools and equipment to maintain and ensure safety culture at all times. Contractor to submit a Health and Safety Plan, Environmental Mitigation plan to be approved by Engineer prior to start of work.		LS	1		
2.04	SOLAR SYSTEM					
2.04.01	F032-32-FC - Rmaile-Rmaile-TS1	TS1	LS	1	$ -	$ -
2.04.02	F034-34-Collège Mar Abda-Deir El Qamar-Deir El Qamar-TS2	TS2	LS	1	$ -	$ -
2.04.03	F035-35-Ecole St Joseph De L'Apparition-Deir El Qamar-Deir El Qamar-TS2	TS2	LS	1	$ -	$ -
2.04.04	F036-36-Ecole El Marj-Chouf Baaklin-Baaklin-TS2	TS2	LS	1	$ -	$ -
2.04.05	F061-61-Marjeyoun National College-Marj Aayoun-TS2	TS2	LS	1	$ -	$ -
2.04.06	F096-96-SSCC Machghara-Machghara-TS2	TS2	LS	1	$ -	$ -
2.04.07	F088-88-Collège Des Soeurs Du Rosaire-Maamrieh / Saida-Saida-TS3	TS3	LS	1	$ -	$ -
2.04.08	F029-29-Ecole Notre Dame Du Liban Des Soeurs Antonines Rmeich-Rmeich-TS4	TS4	LS	1	$ -	$ -
2.04.09	F033-33-SSCC Damour-Damour-TS4	TS4	LS	1	$ -	$ -
2.04.10	F087-87-Collège Notre Dame Des Soeurs Antonines Nabatiyeh-Nabatiyeh-TS4	TS4	LS	1	$ -	$ -
2.04.11	F030-30-SSCC - Ecole Saint Joseph Ain Ebel-Ain ebel-TS5	TS5	LS	1	$ -	$ -
2.04.12	F037-37-Ecole Saint Charbel Jiyeh-Jiyeh-TS5	TS5	LS	1	$ -	$ -
2.04.13	F043-43-Collège Notre Dame De Machmouché-Jezzine-TS5	TS5	LS	1	$ -	$ -
					Sum of Lot B	**$ -**
3	**Lot C**					
3.01	Mobilization and Demobilization					
	Include all necessary "Mobilization" to site and "Demobilization" on completion of the Works as specified		LS	1		
3.02	INSURANCE:					
	Provide from an approved insurance company all required "Insurances" described in the Contract. Contractor's All-Risks Policy, which must also cover 3rd Party Liabilities , Workmen Compensation as per the subcontract Agreement .		LS	1		
3.03	HEALTH SAFETY & ENVIRONMENT REQUIREMENTS					
	Contractor shall abide by the safety rules and regulations . Contractor shall be responsible of all safety issues onsite and shall provide the necessary safety tools and equipment to maintain and ensure safety culture at all times. Contractor to submit a Health and Safety Plan, Environmental Mitigation plan to be approved by Engineer prior to start of work.		LS	1		
3.04	SOLAR SYSTEM					
3.04.01	F106-106-Ecole Al Moutran Barsa-Barsa, Tripoli-TS1	TS1	LS	1	$ -	$ -
3.04.02	F109-109-Ecole Al Moutran Daher El Ain-Tripoli-TS1	TS1	LS	1	$ -	$ -
3.04.03	F112-112-Ecole Al Moutran Zaytoun-Barsa, Tripoli-TS1	TS1	LS	1	$ -	$ -
3.04.04	F001-1-FC Ecole Notre Dame De La Paix Kobayat-Koubayat, Tripoly-TS2	TS2	LS	1	$ -	$ -

Item	Description	Type	Unit	Estimated Quantity	Unit Rate (US $)	Amount (US $)
3.04.05	F108-108-Ecole Al Moutran Chekka-Chekka-TS2	TS2	LS	1	$ -	$ -
3.04.06	F113-113-Ecole Al Moutran Al Menye-Minye-TS2	TS2	LS	1	$ -	$ -
3.04.07	150-89-01-Collège National Orthodoxe – Kobbe-Tripoli-TS3	TS3	LS	1	$ -	$ -
3.04.08	F097-97-North Lebanon College (Al Kalima School - St. Anthony)-ZGHARTA-TS5	TS5	LS	1	$ -	$ -
					Sum of Lot C	**$ -**
4	**Lot D**					
4.01	Mobilization and Demobilization					
	Include all necessary "Mobilization" to site and "Demobilization" on completion of the Works as specified		LS	1		
4.02	INSURANCE:					
	Provide from an approved insurance company all required "Insurances" described in the Contract. Contractor's All-Risks Policy, which must also cover 3rd Party Liabilities , Workmen Compensation as per the subcontract Agreement .		LS	1		
4.03	HEALTH SAFETY & ENVIRONMENT REQUIREMENTS					
	Contractor shall abide by the safety rules and regulations . Contractor shall be responsible of all safety issues onsite and shall provide the necessary safety tools and equipment to maintain and ensure safety culture at all times. Contractor to submit a Health and Safety Plan, Environmental Mitigation plan to be approved by Engineer prior to start of work.		LS	1		
4.04	SOLAR SYSTEM					
4.04.01	F041-41-Collège De L'Ange Gardien - Blat-Jbeil-TS1	TS1	LS	1	$ -	$ -
4.04.02	F039-39-Institut Filles De Marie Auxiliatrice De Don Bosco Kartaba-Kartaba-TS2	TS2	LS	1	$ -	$ -
4.04.03	F046-46-FC-Zouk Mikeal Affaires Sociales Vierge Puissante-Zouk Mikael-TS2	TS2	LS	1	$ -	$ -
4.04.04	F063-63-SSCC Mrouj-Mrouj-TS2	TS2	LS	1	$ -	$ -
4.04.05	F066-66-Saint Georges Khenchara-Khenshara-TS2	TS2	LS	1	$ -	$ -
4.04.06	F084-84-SSCC Kharroube-Bikfaya-TS2	TS2	LS	1	$ -	$ -
4.04.07	F047-47-FC-Sainte Louise Ajaltoun-Ajaltoun-TS4	TS4	LS	1	$ -	$ -
4.04.08	F009-9-SSCC Fakiha Ras Baalbeck-Fakiha-TS5	TS5	LS	1	$ -	$ -
4.04.09	F042-42-Collège Des Soeurs Du Rosaire Jbeil-Jbeil-TS5	TS5	LS	1	$ -	$ -
4.04.10	F050-50-Collège Saint Roch Mrah El Mir Kleiat-Ajaltoun-TS5	TS5	LS	1	$ -	$ -
					Sum of Lot D	**$ -**
					Sum of Bill No. 06 LOT A,B,C,D	**$ -**

Bill No. 07 SUMMARY

Description	Amount (US $)
General Notes	
Bill No. 06 LOT A,B,C,D	
Sum of Lot A	$ -
Sum of Lot B	$ -
Sum of Lot C	$ -
Sum of Lot D	$ -
Total Amount of Bill of Quantities	$ -
Add 11 % VAT of Bill of Quantities	$ -
Total Amount of BOQ Including VAT	$ -

ATTACHMENT 4

4.14 TECHNICAL SPECIFICATIONS STATEMENT SHEET

Lot No.	

Instructions to Bidders:

Bidders must enter "Comply", "Not comply" or details of the proposed specification against each paragraph of this specification, comment as necessary, and sign and stamp each page. Where information is presented in the specification, the comment should be “Noted and Understood”. Failure to complete this statement of compliance may result in the offer being rejected.
Any deviation to specification should be stated and if necessary, fully explained as a comment in the compliance column without making any changes to the specification.
Any changes to the specification may invalidate the Bid.
Each compliance sheet shall be duly authorised, signed, dated and stamped using the bidders company stamp.

Ⅰ. Requirement of the Technical Specification Book for Works

No.	Particulars	Required	Statement of compliance				
			TS1	TS2	TS3	TS4	TS5
1	Design of the PV Plant	The design of the PV plant shall be developed by each bidder based on the field survey at each school as well as the technical specification book for works.					
2	Performance Ratio	The guaranteed performance ratio shall be at least 80% at each site.					
3	Safety measure for PV system protection	Protection devices (fuses, relevant SPDs, circuit breakers, earthing) are required in case of transient overvoltage, short circuit, and ground faults.					
4	Data acquisition and logging function for remote monitoring	The system has output terminal for monitoring and web access function. The online monitoring interface should allow downloads of data as .CSV over the lifetime of the project (20 years) for free with no additional cost or license renewal. Remote access to all measurement points available for the whole project lifetime (20 years) without need for any additional costs or license renewal.					
5	Completion	The whole scope of works including commissioning test approval per lot must be completed within 3 month from the Start Date, which is within 7 days of Contract issue date.					
6	Security and Site Protection Measures	Suitable signs to warn of electrical hazards to be supplied. One fire extinguisher to be supplied near the technical room.					
8	Operational and Maintenance training	1 day training for operation and maintenance at each school					

9	Operational and Maintenance training	Please state the training contents. Please use additional sheets if necessary and attach to your bid.					
10	Special Conditions of Contract: school visits during Defect Liability Period	Please state the frequency of the school visits in accordance with the Special Conditions of the Contract for Defect Liability Period.					
11	Warrantee	For whole PV system, at least 1 year warrantee from the issue of Completion of Works Certificate by the Consultant per lot. For each component, warrantee must be confirmed in accordance with the Warrantee Form in Form 4.17 of IFB. Please confirm.					
12	Electrical Single Line Diagram (SLD) of the PV plant	To be attached: one typical SLD for each typical Site (TS) for each lot must be submitted. If the bidder identifies any exceptional site(s), then a SLD shall be submitted additionally for this/these specific site(s).					

2.PV Modules

	Statement of compliance

No.	Particulars	Required	TS1	TS2	TS3	TS4	TS5
1.1	Country of Origin of PV module						
1.2	Power generation efficiency of module	At least 17%					
1.3	Standards						
1.3.1		IEC61215					
1.3.1.1		The relevant certificate must be attached.					
1.3.2		N/IEC61730-1 and 61730- 2					
1.3..2.1		The relevant certificate must be attached.					
1.4	Output power [kWp] per school in the TS group. This must be met considering negative power tolerance if applicable.	TS 1: at least 6kWp, TS 2: at least 14.4kWp, TS 3: at least 21.6kWp, TS 4: at least 32.4kWp. TS 5: at least 38.4kWp. Please state for each TS group.					
1.4.1	Total quantity of PV modules of the Plant per school in the TS group (excluding spare PV modules).	Please state.					
1.5	Panel Power degradation	shall not exceed 0.8% per year					
1.6	Panel Life Expectancy	At least 20 years					
1.7	Warranty of the product	At least 10 years					
1.8	Shadowing of the PV m	No shadows in a period of ± 4h w.r.t. solar noon					
1.9	To be suitable for use in Lebanon	To be confirmed					
1.1	Supply of spare PV modules	10% of spare PV modules to be supplied to each school, rounded up to the nearest integer. Please state the quantity of spare PV modules to be supplied.					
1.11	Date of the manufacturing of the PV modules	Within 12 months from the date of Contract issue date. To be confirmed. Bidders are requested to confirm in the Guarantee letter, too. At the installation stage, a letter from the manufacturer must be approved by the Consultant.					

1.12	Full technical data	To be attached					
1.13	Layout plan of the Plant	To be attached: one typical layout plan for each typical Site (TS) in each lot must be submitted. If the bidder identifies any exceptional site(s), then a layout plan shall be submitted additionally for this/these specific sites.					
1.14	Manufacturer's authorisation letter evidencing their authority for the bidder to submit the bid including confirmation of the origin of the Goods.	To be attached					

Ⅱ. Optimal design from bidder

		Proposed specification by bidder				
No.	Particulars	TS1	TS2	TS3	TS4	TS5
2.1	PV Cell					
2.1.1.1	Manufacturer					
2.1.1.2	Country of origin					
2.1.1.3	Cell type					
2.2	PV module					
2.2.1	Manufacturer					
2.2.2	Model No.					
2.2.3	Country of origin					
2.2.4	Cell quantity per module					
2.2.5	Maximum Power					
2.2.6	Open circuit voltage					
2.2.7	Short circuit current					
2.2.8	Max Power Voltage					
2.2.9	Max Power Current					
2.2.10	Normal Operating Cell Temperature					
2.2.11	Temperature coefficient Pmax					
2.2.12	Length					

2.2.13	Width					
2.2.14	Depth					
2.2.15	Weight					
2.3	PV array					
2.3.2	Connection of PV module					
2.3.1	Country of origin					
2.3.4	Quantity of module per array					
2.3.4	Angle and azimuth direction [deg]					
2.3.5	Dimensions of array					

3. Structure

No.	Particulars	Required	Statement of compliance				
1.1	Highest elevation point	Should not exceed 2m above roof level	TS1	TS2	TS3	TS4	TS5
1.2	Inclination of Panels	Between 5°and 45°					
1.3	Treatment of steel for anti-rust	Use hot dip galvanized steel or aluminum. Cold galvanization or anti-rust painting are not accepted. Only cut edges and openings should be treated by cold galvanized methods.					
1.4	Warrantee	At least 10 years					

1.5	Wind load	Considered as per standard NL 137.					
1.6	To be suitable for use in Lebanon	Please state.					
1.7	Civil Structure Design Note: the design, marerial, and weight of the metallic structure and wind load analysis supported by calculation notes	To be atttached: one typical civil structure design note with calculation note for per lot shall be submitted. If the bidder identifies any exceptional site(s), then a civil structure design note shall be submitted for this/these specific site(s).					

II . Optimal design from bidder

		Proposed specification by bidder				
No.	Particulars	TS1	TS2	TS3	TS4	TS5
2.1	Mounting structure					
2.1.1	Manufacturer's name					
2.1.2	Country of Origin					
2.1.3	Angle [deg]					
2.1.4	Frame material					
2.1.5	Corrosion Protection					
2.1.6	Total Weight [kg]					
2.1.7	Design wind speed [m/s]					
2.1.8	Bolt and/or Nut					
2.1.9	PV array height [m] :					

4.Solar inverter

No.	Particulars	Required	Statement of compliance				
1.1	Maximum European efficiency at nominal power	At least 97%	TS1	TS2	TS3	TS4	TS5
1.2	Safety standard						
1.2.1		IEC61000-3-2, IEC61000-3-3, or IEC61000-3-4					
1.2.1.1		The certificate must be attached.					
1.2.2		EN62109-1 and EN62109-2					
1.2.2.1		The certificate must be attached.					
1.2.3		EN 62116					

1.2.3.1		The certificate must be attached.					
1.3	Warrantee	At least 5 years					
1.4	The ratio of the DC nominal active power of each inverter and peak power of PV array connected to each inverter "Pinv [WAC] / Pmodules [Wp]" C14	Should be between 80% and 100%.					
1.5	Protection Class	IP 65					
1.6	To be suitable for use in L	Please state					
1.7	Full technical data sheet	To be attached.					
1.8	Manufacturer's authorisation letter evidencing their authority for the bidder to submit the bid including confirmation of the origin of the Goods.	To be attached					

II . Optimal design from bidder

No.	Particulars	Proposed specification by bidder				
2.1	Manufacturer	TS1	TS2	TS3	TS4	TS5
2.2	Model					
2.3	Country of Origin					
2.4	DC input:					
2.4.1	Max. generator power					
2.5	AC output					
2.5.1	Rated output					
2.8	Max. power					
2.9	Rated frequency (range)					
2.10	Max. output current					
2.11	DC connection					

2.12	AC connection					
2.13	Humidity					
2.14	Operating temperature range					
2.15	Dimensions (H/W/L)					
2.16	Weight					
2.17	Quantity units of the inverter					
2.18	Number of MPPT / Strings per MPPT					
2.19	Output Power Factor					
2.20	Grid Current THD					
2.21	Applicable for net metering					
2.22	Synchronize Battery with Grid					
2.23	PROTTECTION RATING					

5.cabling and protection devices

No.	Particulars	Required	Statement of compliance				
1.1	PV cable specification	Cables specialized for PV modules are required.	TS1	TS2	TS3	TS4	TS5
1.2	Cable length design for DC	Limit the total voltage drop in the circuit to a value less than 3% of the value at rated power.					
1.3	Connector for cable conne	Industry standard products, removable and lockable connectors.					
1.4	Earthing and Equipotential Bonding for DC and AC sides	The earth resistance value shall be less than 3 ohms.					

Ⅱ. Optimal design from bidder

		Proposed specification by bidder				
No.	**Particulars**	TS1	TS2	TS3	TS4	TS5
5.2.1	Junction box					
5.2.1.1.	Manufacturer's name					

5.2.1.2	Country of Origin					
5.2.1.2.	Enclosure type					
5.2.1.3	Materials					
5.2.1.3.	Dimensions					
5.2.1.4	DC input voltage from PV [V]					
5.2.1.4.	DC input current from PV [A]					
5.2.1.5	Number of input circuit					
5.2.1.5.	Number of output circuit					
5.2.1.6	Output DC current [A]					
5.2.1.6.	Surge protection device					
5.2.1.7	Reverse protection device					
5.2.1.7.	Disconnect switch for input					
5.2.1.8	MCCB for output					
5.2.2	Connection box					
5.2.2.1	Manufacturer's name					
5.2.2.2	Country of Origin					
5.2.2.3	Enclosure type					
5.2.2.4	Materials					
5.2.2.5	Dimensions					
5.2.2.6	DC input voltage [V]					
5.2.2.7	DC input current [A]					
5.2.2.8	Number of input circuit					
5.2.2.9	DC output current [A]					
5.2.2.10	Number of output circuit					
5.2.2.11	Surge protection device					
5.2.2.12	MCCB for input					
5.2.2.13	MCCB for output					

6.Batteries

No.	Particulars	Required	Statement of compliance				
6.1	Battery bank		TS1	TS2	TS3	TS4	TS5
6.2	type	LiFePo4					
6.3	Certication	IEC 62040- EN 62619,ISO 9001:2000 and, UN38.3/UL 1642 or UL 1973/CEI-021					

6.4	Compatible inverters	the battery is approved, by the inverter manufacturer					
			Proposed specification by bidder				
No.	**Particulars**		TS1	TS2	TS3	TS4	TS5
6.1.1	Nominal Batttery Energy						
6.1.2	Nominal Capacity						
6.1.3	Nominal voltage						
6.1.4	Operating vol. Range						
6.1.5	Nominal Power Output						
6.1.6	Recommended Charging current						
6.1.7	Recommended Discharging current						
6.1.8	Net Weight						
6.1.9	Dimension						
6.1.10	Cycles @25deg. 80% DOD						
6.1.11	Communication						
6.1.12	Alarms						
6.1.13	Warrranty						
6.1.14	Protection level						
6.1.15	Mounting						
6.1.16	Module No. and configuration						